HONDA

GENERATOR
EM6000GN

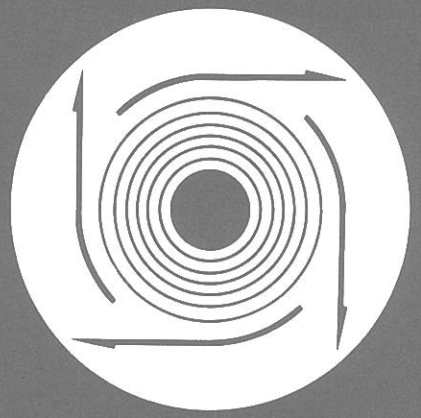

PARTS CATALOGUE

19ZAA0E1

© HONDA MOTOR CO., LTD. 1999

1

HONDA

PARTS LIST NEWS

November 1, 1999

HONDA MOTOR CO., LTD. SERVICE DIVISION

CODE NO.	19ZAA0E1
PARTS CATALOGUE TITLE	EM6000GN
NEWS NO.	001

PARTS CATALOGUE - CORRECTED

ITEM NO	BLOCK NO.	REF. NO.	NEW PART NO. / PART DESCRIPTION	REQD. QTY EM 6000 GN	OLD PART NO.	NOTE	EXCHG	SERIAL NO(S).	TYPE
1	E-12	2	PROTECTOR COMP., FAN COVER *NH1* BLACK	0	19620-ZE3-L60ZA	K			
2	E-12	7	BOLT, FLANGE, 6X8	0	95701-06008-00	K			

Note :

A : Old part still available. B: Unification. C : Sales discontinuance. D : Newly provided. E : Part No. deletion

H : Part No. correction. J : Required No. change. K : Required No. correction. L : Applicable Serial No. correction.

M : Part description correction. P : Unifications part No. change. Q : Reference No. correction. R : Illustration correction.

Z : See "Remarks"

EXCHG. (Exchangeability from new part to old part.)

Y : Exchangeable. N : Not exchangeable.

Please turn over.

Printed in Japan

E-14

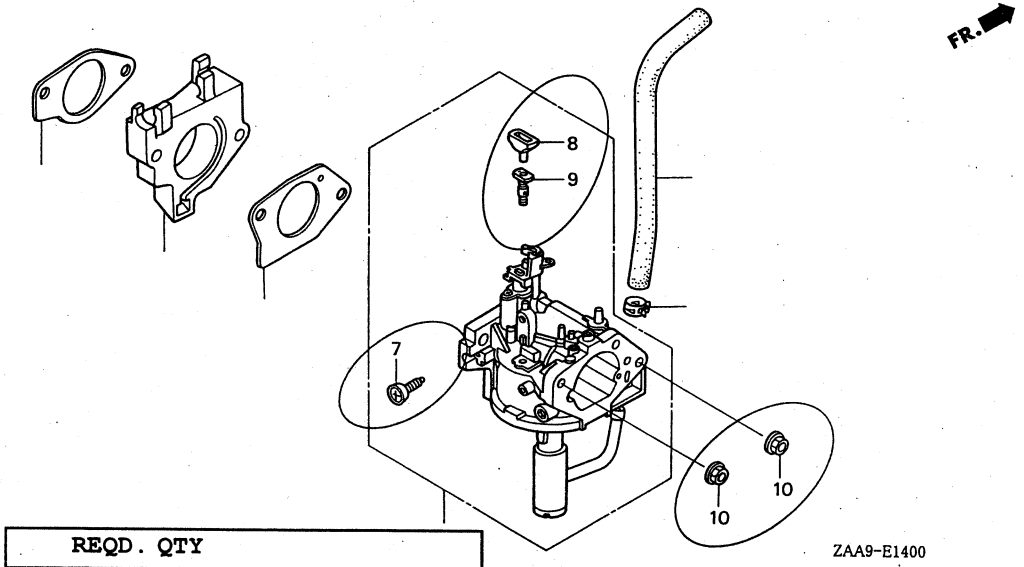

ITEM NO	BLOCK NO.	REF. NO.	NEW PART NO. / PART DESCRIPTION	REQD. QTY EM 6000 GN	OLD PART NO.	NOTE	EXCHG	SERIAL NO(S).	TYPE
3	E-14	7	16124-ZE0-005 SCREW, THROTTLE STOP	1		D			
4	E-14	8	16172-ZE3-W10 COLLAR SET	1		D			
5	E-14	9	99104-ZE9-0450 JET, PILOT, #45	1		D			
6	E-14	10	94050-06000 NUT, FLANGE, 6MM	2		D			

F-18

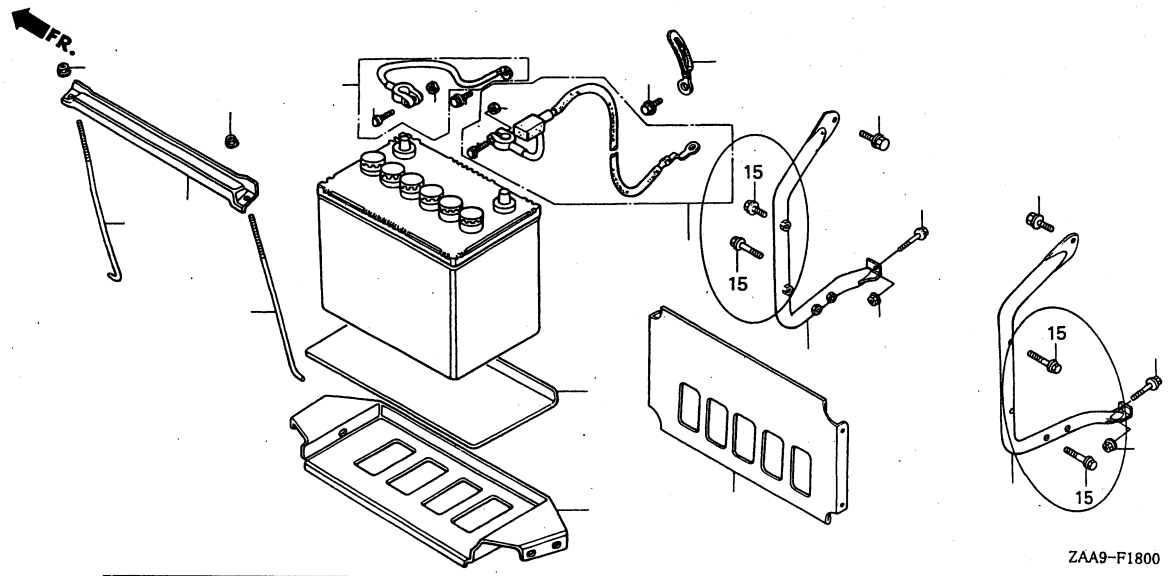

ITEM NO	BLOCK NO.	REF. NO.	NEW PART NO. / PART DESCRIPTION	REQD. QTY EM 6000 GN	OLD PART NO.	NOTE	EXCHG	SERIAL NO(S).	TYPE
7	F-17-20	10	16387-ZF6-F00 STAY COMP., ZERO GOVERNOR	1	16387-ZAA-K60	H			
8	F-17-20	12	CLAMP, WATER HOSE (21.7MM) (CHUO HATSUJO)	2	19513-PE0-003	K			
9	F-18	15	BOLT, FLANGE, 6X28	8	95701-06028-00	K			
10	F-25	13	19620-ZE3-L60ZA PROTECTOR COMP., FAN COVER *NH1* BLACK	1		D			

Please turn over.

F-25

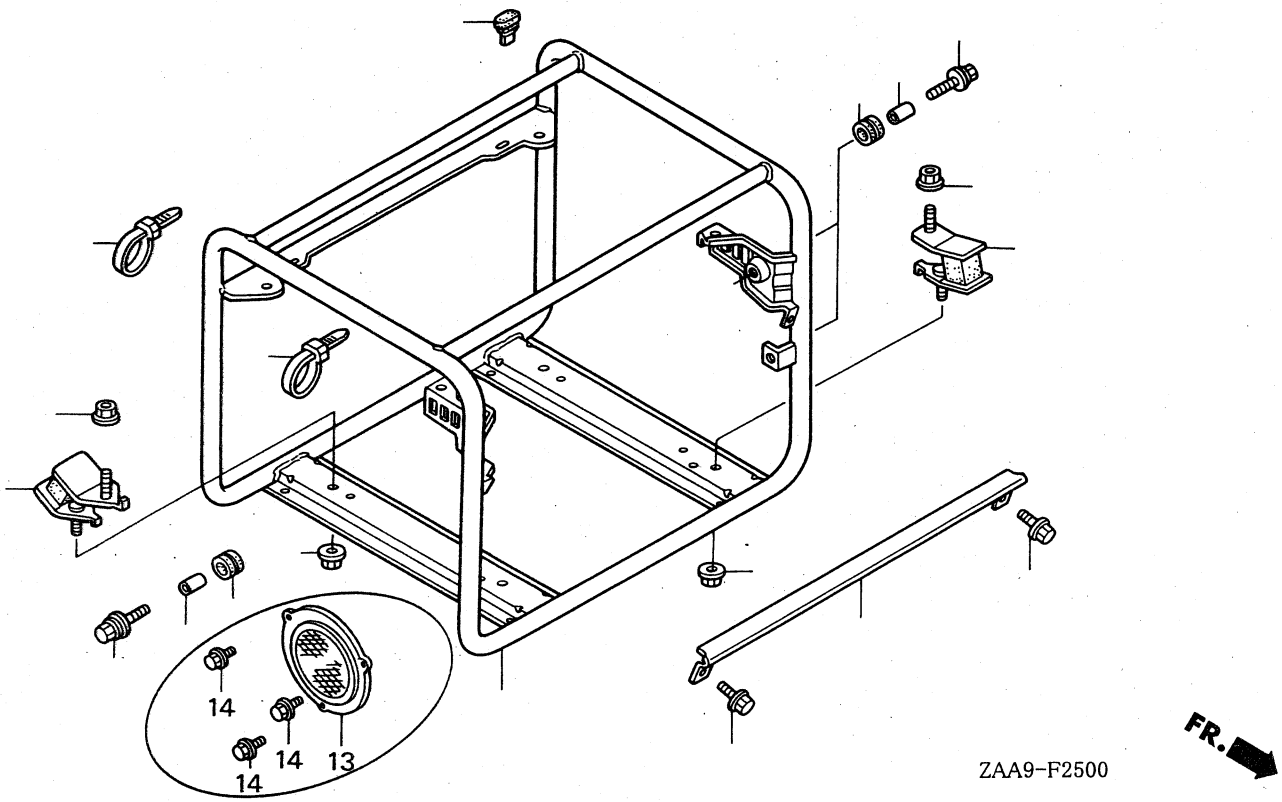

ITEM NO	BLOCK NO.	REF. NO.	NEW PART NO. / PART DESCRIPTION	REQD. QTY EM 6000 GN	OLD PART NO.	NOTE	EXCHG	SERIAL NO(S).	TYPE
11	F-25	14	95701-06008-00 BOLT, FLANGE, 6X8	3		D			

HONDA

PARTS LIST NEWS

December 1, 1999

HONDA MOTOR CO., LTD. SERVICE DIVISION

CODE NO.	19ZAA0E1
PARTS CATALOGUE TITLE	EM6000GN
NEWS NO.	002

PARTS CATALOGUE - CORRECTED

ITEM NO	BLOCK NO.	REF. NO.	NEW PART NO. / PART DESCRIPTION	REQD. QTY EM 6000 GN	OLD PART NO.	NOTE	EXCHG	SERIAL NO(S).	TYPE
1	E-3	1	12000-ZF6-405 BARREL ASSY., CYLINDER (L04)	1	12000-ZF6-L04	H			

Note :

A : Old part still available. B: Unification. C : Sales discontinuance. D : Newly provided. E : Part No. deletion

H : Part No. correction. J : Required No. change. K : Required No. correction. L : Applicable Serial No. correction.

M : Part description correction. P : Unifications part No. change. Q : Reference No. correction. R : Illustration correction.

Z : See "Remarks"

EXCHG. (Exchangeability from new part to old part.)

Y : Exchangeable. N : Not exchangeable.

Printed in Japan

HONDA

PARTS LIST NEWS

December 10, 1999

HONDA MOTOR CO., LTD. SERVICE DIVISION

CODE NO.	19ZAA0E1
PARTS CATALOGUE TITLE	EM6000GN
NEWS NO.	003

PARTS CATALOGUE - CORRECTED

ITEM NO	BLOCK NO.	REF. NO.	NEW PART NO. / PART DESCRIPTION	REQD. QTY EM 6000 GN	OLD PART NO.	NOTE	EXCHG	SERIAL NO(S).	TYPE
1	F-1	3	31425-ZP0-H61ZA CASE, CONTROL *R8* BRIGHT RED	1	31425-ZP0-H61	H			
2	F-17-20	6	16239-ZF6-F01 JOINT, IN. PIPE	1	16239-ZF6-F00	A			

Note :

A : Old part still available. B: Unification. C : Sales discontinuance. D : Newly provided. E : Part No. deletion
H : Part No. correction. J : Required No. change. K : Required No. correction. L : Applicable Serial No. correction.
M : Part description correction. P : Unifications part No. change. Q : Reference No. correction. R : Illustration correction.
Z : See "Remarks"

EXCHG. (Exchangeability from new part to old part.)

Y : Exchangeable. N : Not exchangeable.

Printed in Japan

HONDA

PARTS LIST NEWS

May 22, 2000

HONDA MOTOR CO., LTD. SERVICE DIVISION

CODE NO.	19ZAA0E1
PARTS CATALOGUE TITLE	EM6000GN
NEWS NO.	004

PARTS CATALOGUE - CORRECTED

PLEASE TURN OVER.

Printed in Japan

(01)
EM6000GN

BLOCK	REF.	NOTE	PART NO.	DESCRIPTION	1	FROM	TO	---- TYPE ----
E-6	3		11381-ZE3-800	PACKING, CASE COVER	1		2949254	
		A	11381-ZE3-801	PACKING, CASE COVER	1	2949255		

NOTE A:PART NO.CHANGE D:NEWLY PROVIDED E:PART NO.DELETION K:REQUIRED NO.CORRECTION L:APPLIECATION SERIAL NO.CORRECTION
T:APPLICATION CORRECTION Z:REMARKS CHANGE

HONDA

PARTS LIST NEWS

October 10, 2000

HONDA MOTOR CO., LTD. SERVICE DIVISION

CODE NO.	19ZAA0E1
PARTS CATALOGUE TITLE	EM6000GN
NEWS NO.	005

PARTS CATALOGUE - CORRECTED

(01)
EM6000GN

BLOCK	REF.	NOTE	PART NO.	DESCRIPTION	1	FROM	TO	---- TYPE ----
E-2	1	E	12200-ZF6-F00	*PARTS NO. DELETION				
		D	12200-ZF6-F01	HEAD COMP., CYLINDER	1			

NOTE A:PART NO.CHANGE D:NEWLY PROVIDED E:PART NO.DELETION K:REQUIRED NO.CORRECTION L:APPLIECATION SERIAL NO.CORRECTION
T:APPLICATION CORRECTION Z:REMARKS CHANGE

Printed in Japan

December 11, 2000

HONDA PARTS CATALOGUE NEWS

HONDA MOTOR CO.,LTD.SERVICE DIVISION

CODE NO.	19ZAA0E1
PARTS CATALOGUE TITLE	EM6000GN
NEWS NO.	006

PARTS CATALOGUE - CORRECTED

Printed in Japan

E-9

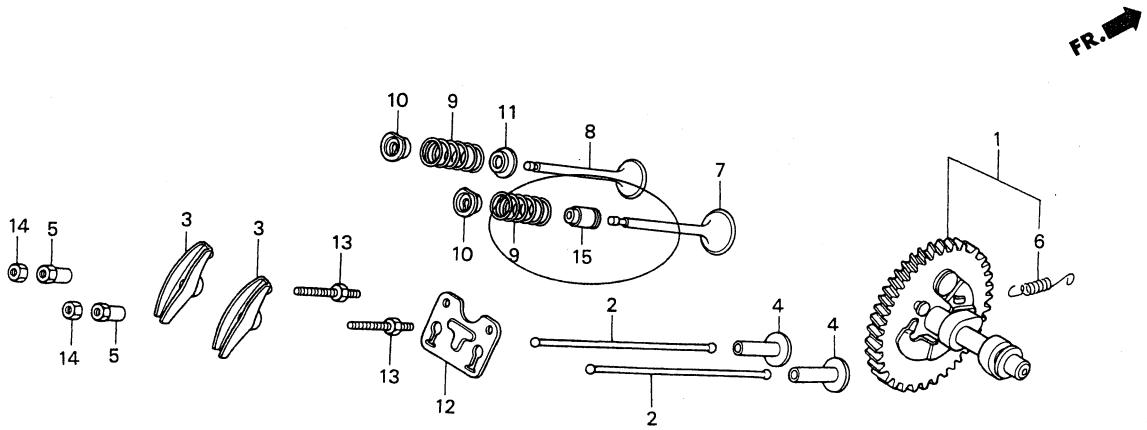

ZAA9-E0900A

(01)
EM6000GN

BLOCK	REF.	NOTE	PART NO.	DESCRIPTION	1	FROM	TO	---- TYPE ----
E-9	15	D	12209-ZE8-003	SEAL, VALVE STEM	1	3065844		

NOTE A:PART NO.CHANGE D:NEWLY PROVIDED E:PART NO.DELETION K:REQUIRED NO.CORRECTION L:APPLIECATION SERIAL NO.CORRECTION
T:APPLICATION CORRECTION Z:REMARKS CHANGE

March 1, 2001

HONDA PARTS CATALOGUE NEWS

HONDA MOTOR CO.,LTD.SERVICE DIVISION

CODE NO.	19ZAA0E1
PARTS CATALOGUE TITLE	EM6000GN
NEWS NO.	007

PARTS CATALOGUE - CORRECTED

Printed in Japan

(01)
EM6000GN

BLOCK	REF.	NOTE	PART NO.	DESCRIPTION	1	FROM	TO	---- TYPE ----
E-3	1	E	12000-ZF6-405	*PARTS NO. DELETION				
		D	12000-ZF6-415	BARREL ASSY., CYLINDER	1			

NOTE A:PART NO.CHANGE D:NEWLY PROVIDED E:PART NO.DELETION K:REQUIRED NO.CORRECTION L:APPLIECATION SERIAL NO.CORRECTION
T:APPLICATION CORRECTION Z:REMARKS CHANGE

July 2, 2001

HONDA
POWER PRODUCTS

PARTS CATALOGUE NEWS

Honda Motor Co., Ltd. Service Division

CODE NO.	19ZAA0E1
PARTS CATALOGUE TITLE	EM6000GN
NEWS NO.	008

PARTS CATALOGUE - CORRECTED

Printed in Japan

(01)
EM6000GN

BLOCK	REF.	NOTE	PART NO.	DESCRIPTION	1	FROM	TO	---- TYPE ----
E-8	4		13200-ZE3-010	ROD ASSY., CONNECTING (STD.) .	1		3177434	
		A	13200-ZE3-020	ROD ASSY., CONNECTING (STD.) .	1	3177435		

NOTE A:PART NO.CHANGE D:NEWLY PROVIDED E:PART NO.DELETION K:REQUIRED NO.CORRECTION L:APPLIECATION SERIAL NO.CORRECTION
T:APPLICATION CORRECTION Z:REMARKS CHANGE

July 23, 2001

HONDA
POWER PRODUCTS

PARTS CATALOGUE NEWS

Honda Motor Co., Ltd. Service Division

CODE NO.	19ZAA0E1
PARTS CATALOGUE TITLE	EM6000GN
NEWS NO.	009

PARTS CATALOGUE - CORRECTED

Printed in Japan

(01)
EM6000GN

BLOCK	REF.	NOTE	PART NO.	DESCRIPTION	1	FROM	TO	---- TYPE ----
F-25	14		95701-06008-00	BOLT, FLANGE, 6X8	3		1000365	
		A	90008-ZE2-003	BOLT, FLANGE, 6X10	3	1000366		

NOTE A:PART NO.CHANGE D:NEWLY PROVIDED E:PART NO.DELETION K:REQUIRED NO.CORRECTION L:APPLIECATION SERIAL NO.CORRECTION
T:APPLICATION CORRECTION Z:REMARKS CHANGE

March 03, 2002

HONDA POWER PRODUCTS

PARTS CATALOGUE NEWS

Honda Motor Co., Ltd. Service Division

PARTS CATALOGUE - CORRECTED

Printed in Japan

CODE NO.	19ZAA0E1
PARTS CATALOGUE NEWS	EM6000GN
NEWS NO.	010

Block No.	Ref. No.	Note	Part No.	Description	Reqd. QTY EM 6000 GN	Serial No.	Parts catalogue code
E-28		LABEL					

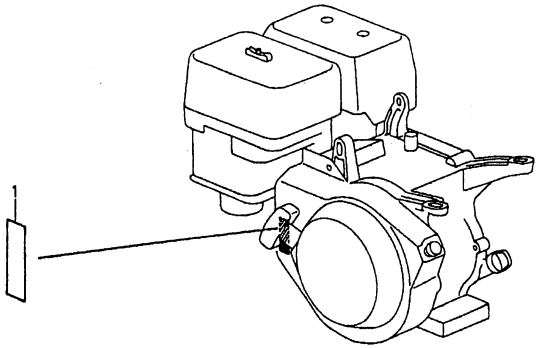

ZAA9-E2800

E-28	1	D	87135-ZE2-000	LABEL (E-SPEC)	1	1003449

NOTE A:PART NO.CHANGE D:NEWLY PROVIDED E:PART NO.DELETION K:REQUIRED NO.CORRECTION L:APPLICATION SERIAL NO.CORRECTION
T:APPLICATION CORRECTION Z:REMARKS CHANGE

October 27, 2002

HONDA
POWER PRODUCTS

PARTS CATALOGUE NEWS

Honda Motor Co., Ltd. Service Division

Printed in Japan

CODE NO.	19ZAA0E1
PARTS CATALOGUE NEWS	EM6000GN
NEWS NO.	011

This type has been added into model EM6000GN.

As for the parts not listed on this Parts Catalogue News, use the parts of base type.

Model	Type	Parts catalogue type		Applicable engine serial No.	Applicable frame serial No.
		Base type	Additional type		
EM6000GN	R	R	R/A	GCAA-3400001~	EZGM-1010001~

NOTE A:PART NO.CHANGE D:NEWLY PROVIDED E:PART NO.DELETION K:REQUIRED NO.CORRECTION L:APPLICATION SERIAL NO.CORRECTION
T:APPLICATION CORRECTION Z:REMARKS CHANGE

April 20, 2003

HONDA POWER PRODUCTS

PARTS CATALOGUE NEWS

Honda Motor Co., Ltd. Service Division

PARTS CATALOGUE - CORRECTED

Printed in Japan

CODE NO.	19ZAA0E1
PARTS CATALOGUE NEWS	EM6000GN
NEWS NO.	012

Block No.	Ref. No.	Note	Part No.	Description	Reqd. QTY EM 6000 GN	Serial No.	Parts catalogue code
FOP-2			SWITCH BOX				

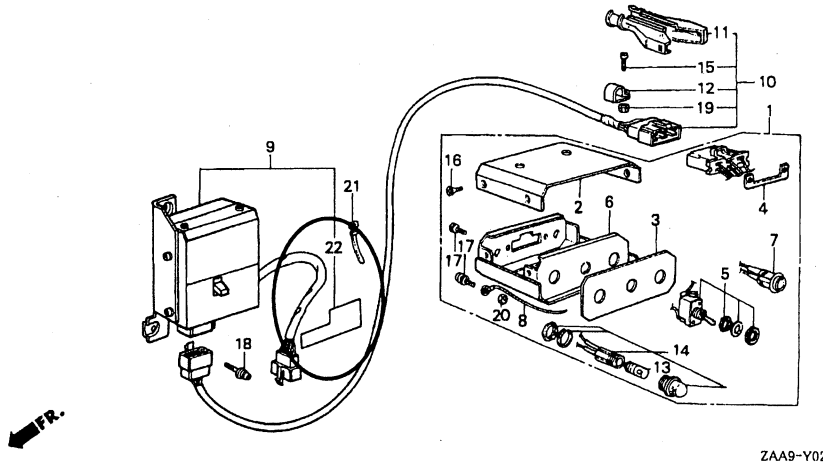

ZAA9-Y0200A

FOP-2	22	D	31654-899-000	MARK, REMOTE CONTROL	(1)

NOTE A:PART NO.CHANGE D:NEWLY PROVIDED E:PART NO.DELETION K:REQUIRED NO.CORRECTION L:APPLICATION SERIAL NO.CORRECTION
T:APPLICATION CORRECTION Z:REMARKS CHANGE

June 01, 2003

HONDA POWER PRODUCTS

PARTS CATALOGUE NEWS

Honda Motor Co., Ltd. Service Division

PARTS CATALOGUE - CORRECTED

Printed in Japan

CODE NO.	19ZAA0E1
PARTS CATALOGUE NEWS	EM6000GN
NEWS NO.	013

Block No.	Ref. No.	Note	Part No.	Description	Reqd.QTY EM 6000 GN	Serial No.		Parts catalogue code
F-31	2		87103-747-000	MARK, HONDA	1	-------	-------	R
					1	-------	1010003	R/A
		A	87103-747-010	.....	1	1010004	-------	R/A

NOTE A:PART NO.CHANGE D:NEWLY PROVIDED E:PART NO.DELETION K:REQUIRED NO.CORRECTION L:APPLICATION SERIAL NO.CORRECTION
T:APPLICATION CORRECTION Z:REMARKS CHANGE

November 02, 2003

HONDA POWER PRODUCTS

PARTS CATALOGUE NEWS

Honda Motor Co., Ltd. Service Division

PARTS CATALOGUE - CORRECTED

Printed in Japan

CODE NO.	19ZAA0E1
PARTS CATALOGUE NEWS	EM6000GN
NEWS NO.	014

Block No.	Ref. No.	Note	Part No.	Description	Reqd.QTY EM 6000 GN	Serial No.		Parts catalogue code
F-1	2		31420-ZAA-K61ZA	PANEL, CONTROL				
				R8.....BRIGHT RED	1	-------	-------	R
					1	-------	1010003	R/A
		A	31420-ZAA-K61ZB	PANEL,CONTROL				
				R280.....POWER RED	1	1010004	-------	R/A
	3		31425-ZP0-H61ZA	CASE, CONTROL				
				R8.....BRIGHT RED	1	-------	-------	R
					1	-------	1010003	R/A
		A	31425-ZP0-H61ZB	*R280*.....POWER RED	1	1010004	-------	R/A
	11		32340-ZAA-K61ZA	BOX ASSY., CONTROL				
				R8.....BRIGHT RED	1	-------	-------	R
					1	-------	1010003	R/A
		A	32340-ZAA-K61ZB	BOX ASSY,CONTROL				
				R280.....POWER RED	1	1010004	-------	R/A
F-17-10	1		63110-ZAA-K61ZA	COVER COMP., TOP				
				R8.....BRIGHT RED	1	-------	-------	R
					1	-------	1010003	R/A
		A	63110-ZAA-K61ZB	COVER COMP.,TOP				
				R280.....POWER RED	1	1010004	-------	R/A

NOTE A:PART NO.CHANGE D:NEWLY PROVIDED E:PART NO.DELETION K:REQUIRED NO.CORRECTION L:APPLICATION SERIAL NO.CORRECTION
T:APPLICATION CORRECTION Z:REMARKS CHANGE

BOOKNo.:19ZAA0E1

Block No.	Ref. No.	Note	Part No.	Description	Reqd.QTY EM 6000 GN	Serial No.		Parts catalogue code
FOP-2	1		31610-ZB4-000ZA	BOX ASSY., SWITCH				
				R8.....BRIGHT RED	(1)	-------	-------	R
					(1)	-------	1010003	R/A
		A	31610-ZB4-000ZC	*R280*.....POWER RED	(1)	1010004	-------	R/A
	2		31611-880-810ZA	COVER, UPPER				
				R8.....BRIGHT RED	(1)	-------	-------	R
					(1)	-------	1010003	R/A
		A	31611-880-810ZE	*R280*.....POWER RED	(1)	1010004	-------	R/A
	6		31615-ZB4-000ZA	CASE COMP., SWITCH				
				R8.....BRIGHT RED	(1)	-------	-------	R
					(1)	-------	1010003	R/A
		A	31615-ZB4-000ZD	*R280*.....POWER RED	(1)	1010004	-------	R/A

NOTE A:PART NO.CHANGE D:NEWLY PROVIDED E:PART NO.DELETION K:REQUIRED NO.CORRECTION L:APPLICATION SERIAL NO.CORRECTION
T:APPLICATION CORRECTION Z:REMARKS CHANGE

November 09, 2003

HONDA
POWER PRODUCTS

PARTS CATALOGUE NEWS

Honda Motor Co., Ltd. Service Division

PARTS CATALOGUE - CORRECTED

Printed in Japan

CODE NO.	19ZAA0E1
PARTS CATALOGUE NEWS	EM6000GN
NEWS NO.	015

Block No.	Ref. No.	Note	Part No.	Description	Reqd. QTY EM 6000 GN	Serial No.			Parts catalogue code
F-31	1		87101-ZAA-K60	EMBLEM	1	-------	-------	R	
					1	-------	1010003	R/A	
		A	87101-ZAA-K61	.....	1	1010004	-------	R/A	

NOTE A:PART NO.CHANGE D:NEWLY PROVIDED E:PART NO.DELETION K:REQUIRED NO.CORRECTION L:APPLICATION SERIAL NO.CORRECTION
T:APPLICATION CORRECTION Z:REMARKS CHANGE

April 12, 2004

HONDA POWER PRODUCTS

PARTS CATALOGUE NEWS

Honda Motor Co., Ltd. Service Division

PARTS CATALOGUE - CORRECTED

Printed in Japan

CODE NO.	19ZAA0E1
PARTS CATALOGUE NEWS	EM6000GN
NEWS NO.	016

Block No.	Ref. No.	Note	Part No.	Description	Reqd. QTY EM 6000 GN	Serial No.			Parts catalogue code
F-1	16		35111-880-003	KEY COMP.	2	-------	-------	R	
					2	-------	1010086	R/A	
		A	35111-880-013	.....	2	1010087	-------	R/A	
F-31	4		87150-ZAA-K60	PLATE, CAUTION	1	-------	-------	R	
					1	-------	1010003	R/A	
		A	87150-ZAA-K61	.....	1	1010004	-------	R/A	
FOP-2	22		31654-899-000	MARK, REMOTE CONTROL	(1)	-------	-------	R	
					(1)	-------	1010003	R/A	
		A	31654-899-010	.....	(1)	1010004	-------	R/A	

NOTE A:PART NO. CHANGE D:NEWLY PROVIDED E:PART NO. DELETION K:REQUIRED NO. CORRECTION L:APPLICATION SERIAL NO. CORRECTION
T:APPLICATION CORRECTION Z:REMARKS CHANGE

July 11, 2004

HONDA POWER PRODUCTS

PARTS CATALOGUE NEWS

Honda Motor Co., Ltd. Service Division

PARTS CATALOGUE - CORRECTED

Printed in Japan

CODE NO.	19ZAA0E1
PARTS CATALOGUE NEWS	EM6000GN
NEWS NO.	017

Block No.	Ref. No.	Note	Part No.	Description	Reqd. QTY EM 6000 GN	Serial No.			Parts catalogue code
E-2	1	T	12200-ZF6-F01	HEAD COMP., CYLINDER	1	-------	-------	R	
		D	12200-ZF6-405	.....	1	-------	-------	R/A	

NOTE A:PART NO. CHANGE D:NEWLY PROVIDED E:PART NO. DELETION K:REQUIRED NO. CORRECTION L:APPLICATION SERIAL NO. CORRECTION
T:APPLICATION CORRECTION Z:REMARKS CHANGE

August 01, 2004

HONDA POWER PRODUCTS

PARTS CATALOGUE NEWS

Honda Motor Co., Ltd. Service Division

PARTS CATALOGUE - CORRECTED

Printed in Japan

CODE NO.	19ZAA0E1
PARTS CATALOGUE NEWS	EM6000GN
NEWS NO.	018

Block No.	Ref. No.	Note	Part No.	Description	Reqd. QTY EM 6000 GN	Serial No.		Parts catalogue code
E-3	1	E	12000-ZF6-425	*PARTS NO. DELETION				
		D	12000-ZF6-435	BARREL ASSY., CYLINDER (SEL-ALT)	1	-------	-------	R/A

NOTE A:PART NO.CHANGE D:NEWLY PROVIDED E:PART NO.DELETION K:REQUIRED NO.CORRECTION L:APPLICATION SERIAL NO.CORRECTION
T:APPLICATION CORRECTION Z:REMARKS CHANGE

December 26, 2004

HONDA POWER PRODUCTS

PARTS CATALOGUE NEWS

Honda Motor Co., Ltd. Service Division

PARTS CATALOGUE - CORRECTED

Printed in Japan

CODE NO.	19ZAA0E1
PARTS CATALOGUE TITLE	EM6000GN
NEWS NO.	019

Block No.	Ref. No.	Note	Part No.	Description	Reqd.QTY EM 6000 GN	Serial No.	Parts catalogue code
E-2	1	E	12200-ZF6-405	*PARTS NO. DELETION			
		D	12200-ZF6-415	HEAD COMP., CYLINDER (CNG) ...	1	------- -------	R/A

NOTE A:PART NO.CHANGE D:NEWLY PROVIDED E:PART NO.DELETION K:REQUIRED NO.CORRECTION L:APPLICATION SERIAL NO.CORRECTION
T:APPLICATION CORRECTION Z:REMARKS CHANGE

June 26, 2005

HONDA POWER PRODUCTS

PARTS CATALOGUE NEWS

Honda Motor Co., Ltd. Service Division

PARTS CATALOGUE - CORRECTED

Printed in Japan

CODE NO.	19ZAA0E1
PARTS CATALOGUE TITLE	EM6000GN
NEWS NO.	020

Block No.	Ref. No.	Note	Part No.	Description	Reqd. QTY EM 6000 GN	Serial No.			Parts catalogue code
E-20	2		30700-ZE1-013	CAP ASSY., NOISE SUPPRESSOR (NICHIWA Y-EZ RTFM256)	1	-------	-------	R	
					1	-------	4102817	R/A	
		A	30700-ZF6-811	CAP ASSY., NOISE SUPPRESSOR (NGK Y-EZDB)	1	4102818	-------	R/A	

NOTE A:PART NO. CHANGE D:NEWLY PROVIDED E:PART NO. DELETION K:REQUIRED NO. CORRECTION L:APPLICATION SERIAL NO. CORRECTION
T:APPLICATION CORRECTION Z:REMARKS CHANGE

October 10, 2005

HONDA POWER PRODUCTS

PARTS CATALOGUE NEWS

Honda Motor Co., Ltd. Service Division

PARTS CATALOGUE - CORRECTED

Printed in Japan

CODE NO.	19ZAA0E1
PARTS CATALOGUE TITLE	EM6000GN
NEWS NO.	021

Block No.	Ref. No.	Note	Part No.	Description	Reqd. QTY EM 6000 GN	Serial No.		Parts catalogue code
E-7	1		13310-ZF6-D40	CRANKSHAFT COMP.	1	-------	-------	R
					1	-------	4106799	R/A
		A	13310-ZF6-D41	.....	1	4106800	-------	R/A

NOTE A:PART NO. CHANGE D:NEWLY PROVIDED E:PART NO. DELETION K:REQUIRED NO. CORRECTION L:APPLICATION SERIAL NO. CORRECTION
T:APPLICATION CORRECTION Z:REMARKS CHANGE

January 29, 2006

HONDA POWER PRODUCTS

PARTS CATALOGUE NEWS

Honda Motor Co., Ltd. Service Division

PARTS CATALOGUE - CORRECTED

Printed in Japan

CODE NO.	19ZAA0E1
PARTS CATALOGUE TITLE	EM6000GN
NEWS NO.	022

Block No.	Ref. No.	Note	Part No.	Description	Reqd. QTY EM 6000 GN	Serial No.			Parts catalogue code
E-7	1		13310-ZF6-D41	CRANKSHAFT COMP.	1	4106800	4137485	R/A	
		A	13310-ZF6-D42	.....	1	4137486	-------	R/A	
	3		91001-ZF6-003	BEARING, RADIAL BALL, 6207S ..	1	-------	-------	R	
					1	-------	4137485	R/A	
		A	91001-ZF6-013	BEARING, RADIAL BALL, 6207SH .	1	4137486	-------	R/A	
E-28	1	L	87135-ZE2-020	LABEL, E-SPEC (15.5X27.5)	1	-------	4121053	R/A	

NOTE A:PART NO. CHANGE D:NEWLY PROVIDED E:PART NO. DELETION K:REQUIRED NO. CORRECTION L:APPLICATION SERIAL NO. CORRECTION
T:APPLICATION CORRECTION Z:REMARKS CHANGE

August 31, 2006

HONDA POWER PRODUCTS

PARTS CATALOGUE NEWS

Honda Motor Co., Ltd. Service Division

PARTS CATALOGUE - CORRECTED

Printed in Japan

CODE NO.	19ZAA0E1
PARTS CATALOGUE NEWS	EM6000GN
NEWS NO.	023

Block No.	Ref. No.	Note	Part No.	Description	Reqd. QTY EM 6000 GN	Serial No.		Parts catalogue code
E-2			CYLINDER HEAD					

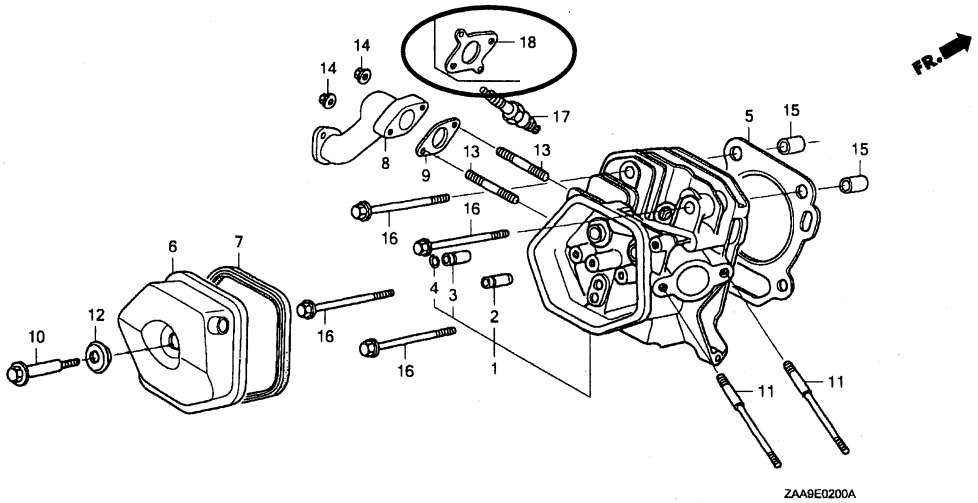

E-2	9	L	18333-ZE3-800	GASKET, EX. PIPE	1	-------	-------	R
					1	-------	4179879	R/A
	18	D	18333-ZF6-W01	GASKET, EX. PIPE	1	4179880	-------	R/A

NOTE A:PART NO. CHANGE D:NEWLY PROVIDED E:PART NO. DELETION K:REQUIRED NO. CORRECTION L:APPLICATION SERIAL NO. CORRECTION
T:APPLICATION CORRECTION Z:REMARKS CHANGE

November 19, 2006

HONDA POWER PRODUCTS

PARTS CATALOGUE NEWS

Honda Motor Co., Ltd. Service Division

PARTS CATALOGUE - CORRECTED

Printed in Japan

CODE NO.	19ZAA0E1
PARTS CATALOGUE NEWS	EM6000GN
NEWS NO.	024

Block No.	Ref. No.	Note	Part No.	Description	Reqd. QTY EM 6000 GN	Serial No.			Parts catalogue code
E-19	4		90201-ZE3-V00	NUT, SPECIAL, 16MM	1	-------	-------	R	
					1	-------	4190989	R/A	
		A	90201-ZE3-790	.....	1	4190990	-------	R/A	

NOTE A:PART NO. CHANGE D:NEWLY PROVIDED E:PART NO. DELETION K:REQUIRED NO. CORRECTION L:APPLICATION SERIAL NO. CORRECTION
T:APPLICATION CORRECTION Z:REMARKS CHANGE

May 28, 2007

HONDA POWER PRODUCTS

PARTS CATALOGUE NEWS

Honda Motor Co., Ltd. Service Division

PARTS CATALOGUE - CORRECTED

Printed in Japan

CODE NO.	19ZAA0E1
PARTS CATALOGUE NEWS	EM6000GN
NEWS NO.	025

Block No.	Ref. No.	Note	Part No.	Description	Reqd. QTY EM 6000 GN	Serial No.			Parts catalogue code
E-2	16		95725-10080-00	BOLT, FLANGE, 10X80	4	-------	-------	R	
					4	-------	4216268	R/A	
		A	95701-10080-00	.....	4	4216269	-------	R/A	
E-3	4		34150-ZH7-003	ALERT UNIT, OIL	1	-------	-------	R	
					1	-------	4225977	R/A	
		A	34150-ZH7-013	.....	1	4225978	-------	R/A	
E-20	1		30500-ZF6-W02	COIL ASSY., IGNITION	1	-------	-------	R	
					1	-------	4216268	R/A	
		A	30500-ZF6-W03	.....	1	4216269	-------	R/A	
E-21	4		31210-ZE3-013	MOTOR UNIT, STARTER	1	-------	-------	R	
					1	-------	4222104	R/A	
		A	31210-ZE3-023	.....	1	4222105	-------	R/A	

NOTE A:PART NO. CHANGE D:NEWLY PROVIDED E:PART NO. DELETION K:REQUIRED NO. CORRECTION L:APPLICATION SERIAL NO. CORRECTION
T:APPLICATION CORRECTION Z:REMARKS CHANGE

June 17, 2007

HONDA POWER PRODUCTS

PARTS CATALOGUE NEWS

Honda Motor Co., Ltd. Service Division

PARTS CATALOGUE - CORRECTED

Printed in Japan

CODE NO.	19ZAA0E1
PARTS CATALOGUE NEWS	EM6000GN
NEWS NO.	026

Block No.	Ref. No.	Note	Part No.	Description	Reqd. QTY EM 6000 GN	Serial No.			Parts catalogue code
E-3	2		15510-ZE2-043	SWITCH ASSY., OIL LEVEL	1	-------	-------	R	
					1	-------	4222054	R/A	
		A	15510-ZE2-053	.....	1	4222055	-------	R/A	

NOTE A:PART NO. CHANGE D:NEWLY PROVIDED E:PART NO. DELETION K:REQUIRED NO. CORRECTION L:APPLICATION SERIAL NO. CORRECTION
T:APPLICATION CORRECTION Z:REMARKS CHANGE

August 28, 2007

HONDA POWER PRODUCTS

PARTS CATALOGUE NEWS

Honda Motor Co., Ltd. Service Division

PARTS CATALOGUE - CORRECTED

Printed in Japan

CODE NO.	19ZAA0E1
PARTS CATALOGUE NEWS	EM6000GN
NEWS NO.	027

Block No.	Ref. No.	Note	Part No.	Description	Reqd. QTY EM 6000 GN	Serial No.		Parts catalogue code
F-1	15		35100-ZA0-013	SWITCH ASSY., COMBINATION	1	-------	-------	R
					1	-------	1010887	R/A
		A	35100-ZA0-023	.....	1	1010888	-------	R/A

NOTE A:PART NO. CHANGE D:NEWLY PROVIDED E:PART NO. DELETION K:REQUIRED NO. CORRECTION L:APPLICATION SERIAL NO. CORRECTION
T:APPLICATION CORRECTION Z:REMARKS CHANGE

October 07, 2007

HONDA POWER PRODUCTS

PARTS CATALOGUE NEWS

Honda Motor Co., Ltd. Service Division

PARTS CATALOGUE - CORRECTED

Printed in Japan

CODE NO.	19ZAA0E1
PARTS CATALOGUE NEWS	EM6000GN
NEWS NO.	028

Block No.	Ref. No.	Note	Part No.	Description	Reqd. QTY EM 6000 GN	Serial No.			Parts catalogue code
FOP-2	3		31612-ZB4-000	PLATE, SWITCH & INDICATOR	(1)	-------	-------	R	
					(1)	-------	1010086	R/A	
		A	31612-ZB4-010	.....	(1)	1010087	-------	R/A	

NOTE A:PART NO. CHANGE D:NEWLY PROVIDED E:PART NO. DELETION K:REQUIRED NO. CORRECTION L:APPLICATION SERIAL NO. CORRECTION
T:APPLICATION CORRECTION Z:REMARKS CHANGE

February 25, 2008

HONDA POWER PRODUCTS

PARTS CATALOGUE NEWS

Honda Motor Co., Ltd. Service Division

PARTS CATALOGUE - CORRECTED

Printed in Japan

CODE NO.	19ZAA0E1
PARTS CATALOGUE NEWS	EM6000GN
NEWS NO.	029

Block No.	Ref. No.	Note	Part No.	Description	Reqd. QTY EM 6000 GN	Serial No.		Parts catalogue code
E-8	1	L	13010-ZF6-003	RING SET, PISTON (STD.) (NIPPON)	1	-------	------- R	
					1	-------	4278969 R/A	
			13010-ZF6-005	RING SET, PISTON (STD.) (TEIKOKU)	1	-------	------- R	
					1	-------	4278969 R/A	
		L	13011-ZF6-003	RING SET, PISTON (0.25) (NIPPON)	(1)	-------	------- R	
					(1)	-------	4278969 R/A	
			13011-ZF6-005	RING SET, PISTON (0.25) (TEIKOKU)	(1)	-------	------- R	
					(1)	-------	4278969 R/A	
		L	13012-ZF6-003	RING SET, PISTON (0.50) (NIPPON)	(1)	-------	------- R	
					(1)	-------	4278969 R/A	
			13012-ZF6-005	RING SET, PISTON (0.50) (TEIKOKU)	(1)	-------	------- R	
					(1)	-------	4278969 R/A	

NOTE A:PART NO. CHANGE D:NEWLY PROVIDED E:PART NO. DELETION K:REQUIRED NO. CORRECTION L:APPLICATION SERIAL NO. CORRECTION
T:APPLICATION CORRECTION Z:REMARKS CHANGE

Block No.	Ref. No.	Note	Part No.	Description	Reqd. QTY EM 6000 GN	Serial No.		Parts catalogue code
		L	13013-ZF6-003	RING SET, PISTON (0.75) (NIPPON)	(1)	-------	-------	R
					(1)	-------	4278969	R/A
			13013-ZF6-005	RING SET, PISTON (0.75) (TEIKOKU)	(1)	-------	-------	R
					(1)	-------	4278969	R/A
		A	13010-Z5R-004	RING SET, PISTON (STD.) (TEIKOKU)	1	4278970	-------	R/A
		A	13011-Z5R-004	RING SET, PISTON (0.25) (TEIKOKU)	(1)	4278970	-------	R/A
		A	13012-Z5R-004	RING SET, PISTON (0.50) (TEIKOKU)	(1)	4278970	-------	R/A
		A	13013-Z5R-004	RING SET, PISTON (0.75) (TEIKOKU)	(1)	4278970	-------	R/A
	2		13101-ZF6-W00	PISTON (STD.)	1	-------	-------	R
					1	-------	4278969	R/A
			13102-ZF6-W00	PISTON (0.25)	(1)	-------	-------	R
					(1)	-------	4278969	R/A
			13103-ZF6-W00	PISTON (0.50)	(1)	-------	-------	R
					(1)	-------	4278969	R/A
			13104-ZF6-W00	PISTON (0.75)	(1)	-------	-------	R
					(1)	-------	4278969	R/A
		A	13101-ZF6-W01	PISTON (STD.)	1	4278970	-------	R/A
		A	13102-ZF6-W01	PISTON (0.25)	(1)	4278970	-------	R/A
		A	13103-ZF6-W01	PISTON (0.50)	(1)	4278970	-------	R/A
		A	13104-ZF6-W01	PISTON (0.75)	(1)	4278970	-------	R/A

NOTE A:PART NO. CHANGE D:NEWLY PROVIDED E:PART NO. DELETION K:REQUIRED NO. CORRECTION L:APPLICATION SERIAL NO. CORRECTION
T:APPLICATION CORRECTION Z:REMARKS CHANGE

August 17, 2008

HONDA POWER PRODUCTS

PARTS CATALOGUE NEWS

Honda Motor Co., Ltd. Service Division

PARTS CATALOGUE - CORRECTED

Printed in Japan

CODE NO.	19ZAA0E1
PARTS CATALOGUE NEWS	EM6000GN
NEWS NO.	030

Block No.	Ref. No.	Note	Part No.	Description	Reqd. QTY EM 6000 GN	Serial No.			Parts catalogue code
F-15	1		18310-ZD1-E31	MUFFLER COMP.	1	-------	-------	R	
					1	-------	1011845	R/A	
		A	18310-ZD1-E32	.....	1	1011846	-------	R/A	

NOTE A:PART NO. CHANGE D:NEWLY PROVIDED E:PART NO. DELETION K:REQUIRED NO. CORRECTION L:APPLICATION SERIAL NO. CORRECTION
T:APPLICATION CORRECTION Z:REMARKS CHANGE

February 08, 2009

HONDA POWER PRODUCTS

PARTS CATALOGUE NEWS

Honda Motor Co., Ltd. Service Division

PARTS CATALOGUE - CORRECTED

Printed in Japan

CODE NO.	19ZAA0E1
PARTS CATALOGUE NEWS	EM6000GN
NEWS NO.	031

Block No.	Ref. No.	Note	Part No.	Description	Reqd. QTY EM 6000 GN	Serial No.			Parts catalogue code
E-3	2		15510-ZE2-053	SWITCH ASSY., OIL LEVEL	1	4222055	4377591	R/A	
		A	35480-ZF6-003	.....	1	4377592	-------	R/A	

NOTE A:PART NO. CHANGE D:NEWLY PROVIDED E:PART NO. DELETION K:REQUIRED NO. CORRECTION L:APPLICATION SERIAL NO. CORRECTION
T:APPLICATION CORRECTION Z:REMARKS CHANGE

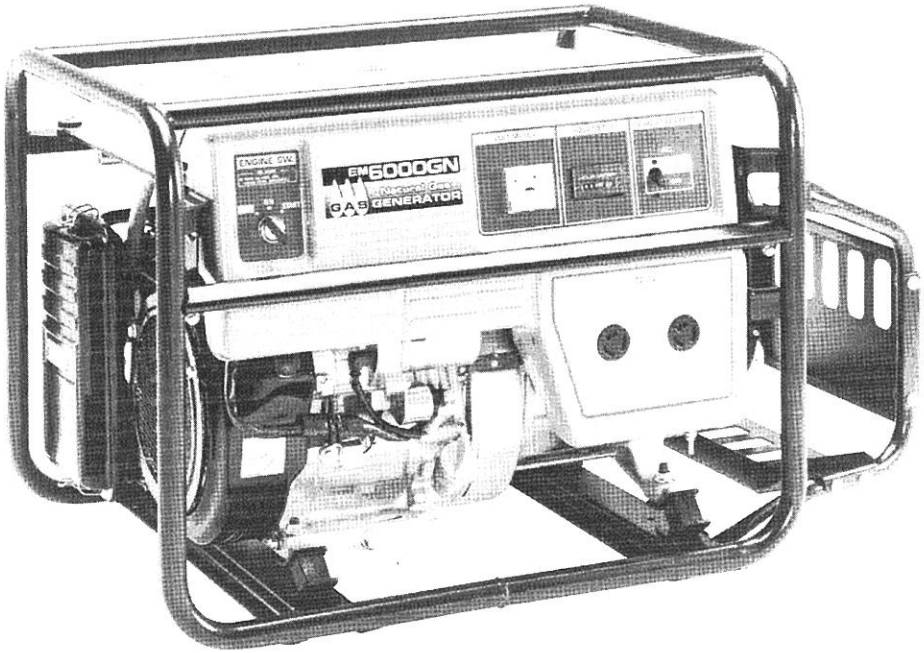

EM6000GN

INDEX

FOREWORD INDEX 1

ENGINE GROUP 2

FRAME GROUP 3

PART NUMBER INDEX 4

PART NAME INDEX 5

B 1

Instruction for use of parts catalogue

- **This parts catalogue was prepared based on the latest information available as of August 20, 1999.**
  - See the parts catalogue news for any revision that is made after August 20, 1999.
- **Always specify the part number when ordering a part.**
  - Check the model, type, serial numbers, color, maker and the size as needed before ordering a part.
  - Note that the illustrations (part drawings) can differ from the actual parts in shape.
    They are given just to help you to refer to the parts.
- **When modifications or additions to the parts catalogue are made, a revised edition will be issued at an appropriate time, with successively progressing a revision number on the cover. We recommend obtaining such revisions in order to keep your parts catalogue up-to-date at all times. To check whether a parts catalogue revision has been issued, please contact your HONDA distributor.**

Initial version issue date August 20, 1999.
HONDA MOTOR CO., LTD.

CONTENTS

	Page	Address No.	
• How to refer to the part information	2	B 2	1
• Part catalogue structure	3	B 3	
• When the parts were revised	4	B 4	
• Abbreviations used in the parts catalogue	4	B 4	
• How to check the part block and serial numbers	5	B 5	
• Models, types and applicable serial numbers	5	B 5	
• Fuel hose, general purpose hoses and vinyl hose	6	B 6	
• How to use the flat rate time (F.R.T.)	7	B 7	
• Illustrated index	8	B 8	
• Engine group	13	C 1	2
• Frame group	25	D 1	3
• Part No. index	39	E 1	4
• Part name index	41	F 1	5

B 2

How to refer to the part information

Ⓐ Reference with "Illustrated index"

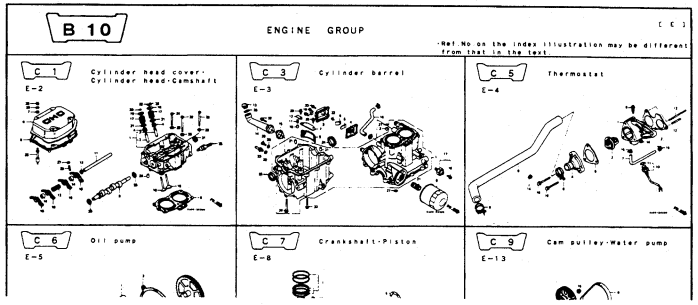

Ⓑ Reference with "Part number index"

I 1 PART NO. INDEX

Part No.	Address No.	Page No.	Part No.	Address No.
06000			13310-ZA0-950	C7
			13316-ZA0-003	C7
06165-ZA0-700	C16	30	13321-ZA0-003	C7
06390-ZA0-800	G9	74	13322-ZA0-003	C8
			13323-ZA0-003	C8
11000			13324-ZA0-003	C8
			13325-ZA0-003	C8
11312-ZA0-D00	H1	82		
11801-ZA0-000	D2	32	14000	
11801-ZA0-800	D2	32		
11802-ZA0-000	D2	32	14101-ZA0-701	C1
11803-ZA0-930	D2	32	14311-ZA0-005	C9

Ⓒ Reference with "Part name index"

J 1 PART NAME INDEX

Part name	Address No.	Page No.	Ref. No.	Pa
[A]				BOLT, FL.
ARM COMP., GOVERNOR	C16	30	16	
ARM, CHOKE	G9	74	5	
ARM, VALVE ROCKER	C1	15	10	
ARMATURE COMP.	C14	28	5	
ARRESTER, SPARK	F8	57	7	
	F9	58	6	
[B]				BOLT, FL.
BAND	H9	90	13	
BAND B1, WIRE	H9	90	14	
BAND, CONNECTING TUBE	F5	54	18	
			19	
	F7	56	9	
BAND, TOOL BOX	F13	62	12	
BAR, PLUG WRENCH	H5	86	8	
BARREL ASSY., CYLINDER	C3	17	1	
BASE, RECOIL STARTER	G13	78	2	
BASE, WHEEL LOCKING	H7	88	3	
BATTERY ASSY.	F13	62	1	
	F14	63	1	

C 10 Carburetor **E-14**

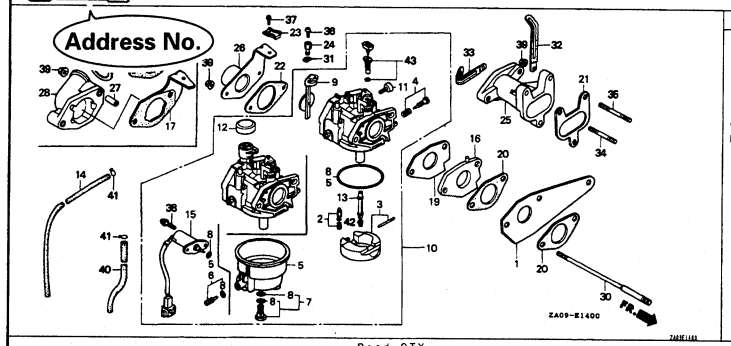

Service Item	E.R.T.
VALVE SET, FLO	7
·FLOAT SET	
·JET, MAIN,	
CARBURETOR ASSY.	0.5
·INSULATOR, CARBURETOR	
·PACKING, CARBURETOR	
·PACKING, INSULATOR	
VALVE ASSY., SOLENOID	0.6
PACKING, INTAKE MANIFOLD	1.7
·MANIFOLD, INTAKE	

Block No.

Ref. No.	Part No.	Description	Reqd. QTY EX 5500 K2	Reqd. QTY ES 6500 K2	Serial No.	Type
1	11815-ZA0-930	STAY, TIMING BELT	1	1		
2	16011-ZA0-931	VALVE SET, FLOAT	1	1		
3	16013-ZA0-931	FLOAT SET	1	1		
4	16016-ZA0-931	SCREW SET, PILOT	1	1	-------- --------	R,U
			-	1	-------- --------	C,L,T
	16016-ZE0-005		1	-	-------- --------	B,C,E,F,G,GV,S,T
5	16023-ZA0-702	CHAMBER SET, FLOAT	1	1		
6	16024-124-760	SCREW SET, DRAIN	1	1		
7	16028-ZA0-981	SCREW SET	1	1		
8	16040-ZA0-702	GASKET SET	1	1		
9	16044-ZA0-932	CHOKE SET	1	1	-------- --------	R,U
			-	1	-------- --------	C,L,T
10	16100-ZA0-935	CARBURETOR ASSY. (BE25A D)	1	1	-------- --------	R,U
			-	1	-------- --------	C,L,T
	16100-ZA0-956	CARBURETOR ASSY. (BE26A G)	1	-	-------- --------	B,C,E,F,G,GV,S,T
11	16124-ZE0-005	SCREW, THROTTLE STOP	1	1		
12	16148-943-003	CAP, CHOKE DUST	1	-	-------- --------	B,C,E,F,G,GV,S,T
13	16166-ZA0-951	NOZZLE, MAIN	1	-	-------- --------	B,C,E,F,G,GV,S,T
	16166-ZA0-931		1	1	-------- --------	R,U
			-	1	-------- --------	C,L,T
14	16199-ZA0-930	TUBE, AIR VENT	1	1		
15	16200-ZA0-L02	VALVE ASSY., SOLENOID	1	1		
		INSULATOR, CARBURETOR	1	1		
		SPACER COMP., CARBURETOR	1	-	-------- --------	R,U
		SPACER COMP., CARBURETOR	1	-	-------- --------	B,C,E,F,G,GV,S,T
1	06165-ZA0-800	PACKING, CARBURETOR	1	1		

Page No.

24

1996.05.10 E

B 3

Part catalogue structure

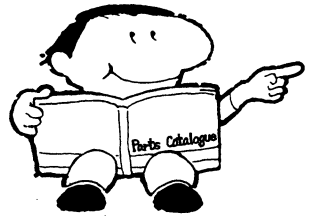

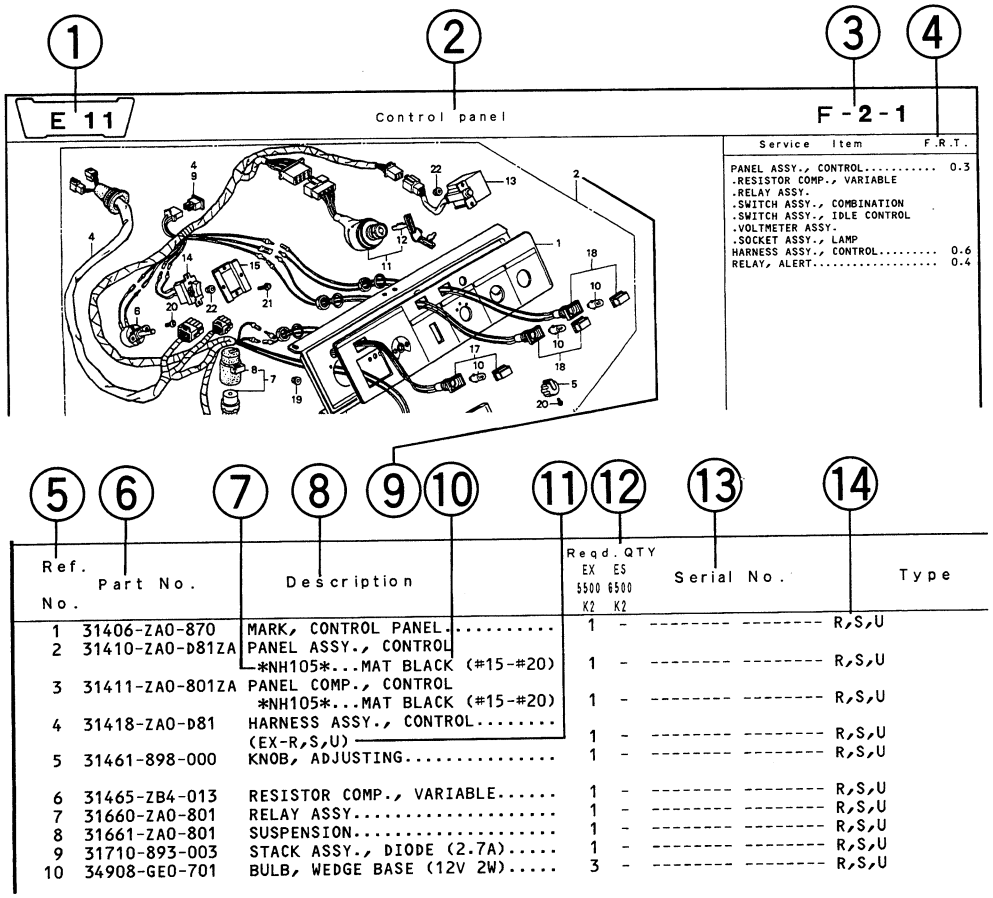

① Address number
- Address number is provided (in place of the page No.) to help you refer to the part with the part No. or part name.

② Block title

③ Block number

④ Service item/Flat rate time

⑤ Reference number
- Title number marked with the parenthesis or parentheses indicates that it continues from the previous page.

⑥ Part number

⑦ HONDA color code

⑧ Description

⑨ Assemblies
- Sections framed with broken lines in the exploded view drawings are available as complete assemblies. (Their individual parts can also be obtained.)

⑩ Color description

⑪ Note
- Notes are shown with the parentheses in the part name column.

⑫ Required quantity
- Required QTY shown in the parenthesis or parentheses indicates the optional part.
- Required QTY marked with "N" Indicates the optional part that should be selected as needed.
- Required QTY indicates the number of the part used in the block.

⑬ Serial number

⑭ Type
- When the type column is blank, it indicates that the part is applicable to all types.
- As the type of the actual unit may differ from the "Parts catalogue, type" please refer to "Models, types and applicable serial numbers" for confirmation.

B 4

When the parts were revised

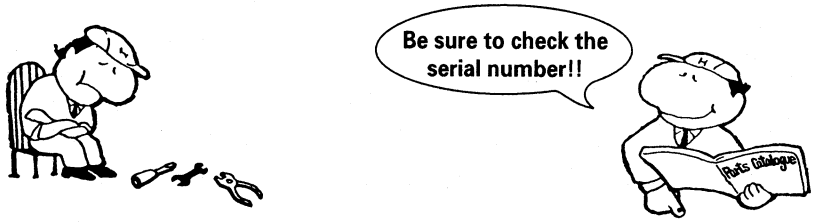

Ref. No.	Part No.	Description	Reqd. QTY EX 5500 K2	Reqd. QTY ES 6500 K2	Serial No.
1	11815-ZA0-930	STAY, TIMING BELT.....	1	1	
2	16011-ZA0-931	VALVE SET, FLOAT.....	1	1	
3	16013-ZA0-931	FLOAT SET.....	1	1	
4	16016-ZA0-931	SCREW SET, PILOT.....	1	1	-------- 1002494
	16016-ZE0-005	.....	1	1	1002495 --------
			1	1	-------- --------
5	16023-ZA0-702	CHAMBER SET, FLOAT.....	1	1	-------- --------
6	16024-124-760	SCREW SET, DRAIN.....	1	1	-------- --------
7	16028-ZA0-981	SCREW SET.....	1	1	-------- --------

The number has been used from the initial model without revision.

When shown at the left side, it is applicable to the models of No.1002495 and the subsequent numbers.

When shown at the right side, it is applicable to the models up to No.1002494.

Abbreviations used in the parts catalogue

- **The following abbreviations are used in the parts name column.**

ASSY. ..... Assembly
COMP. ..... Complete
R. ..... Right
L. ..... Left
STD. ..... Standard
MM ..... Millimeter
T (22T) ..... Tooth (22 Teeth)
A ..... Ampere
V ..... Volt
W ..... Watt
L (100L) ..... Link (100 Links)
A.C. ..... Alternating current
D.C. ..... Direct current
IN. ..... Inlet
EX. ..... Exhaust
FR. ..... Front
RR. ..... Rear
HEX. ..... Hexagonal
P.T.O. ..... Power take off
C.D.I. ..... Capacitive discharge ignition

How to check the part block and serial numbers

Part block	Engine parts E—2~	Carburetor parts E—14	Frame parts F—1~
Numbers needed	Stamped engine number	Stamped carburetor identification number	Stamped frame number
Check point	①	②	③

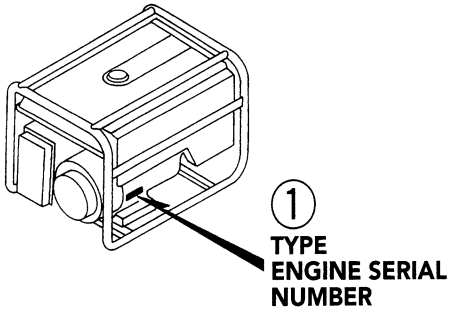

DZAA-A

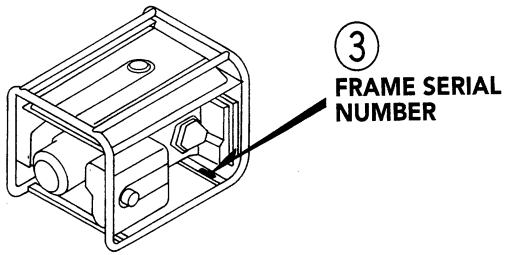

DZAA-B

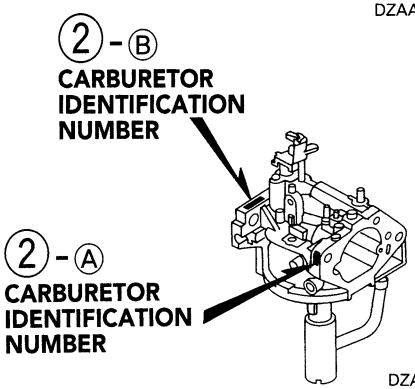

DZAA-C

Models, types and applicable serial numbers

- **Models, types and applicable serial Nos. given in this parts catalogue can be identified as follows.**

Model	Type	Parts catalogue type	Engine		Applicable engine serial No.	Applicable frame serial No.	Applicable carburetor identification No.
			Model	Type			
EM6000GN	R	R	GX390K1	EM7	GCAA-2000001~	EZGM-1000001~	BEL5C [A]

* Of carburetor identification numbers, only the portions underlined in the example below are used for registration.

BE L5C [A] KC ア
Ⓐ Ⓑ

Fuel hose, general purpose hoses and vinyl hose

- The standard part fuel hose, general purpose hose and vinyl hose may be substituted by the coiled bulk part.
- When ordering the standard part fuel hose, general purpose hose and vinyl hose use the bulk part number written in the parts catalog in brackets ( ) underneath the part name.
- When exchanging the hose, cut and use at the specified length as mentioned in the part name.
  (For the method of cutting the bulk part, and method of filling out orders etc., please refer to the instructions issued with the bulk part.)

Bulk part number of fuel hose, general purpose hose and vinyl hose.

Example: 95001 – 75001 – 50M

- M — Bulk part number : Refers to the bulk part.
- 0 — Marking code (hose type) : (fuel hose and general purpose hose)
  Change code (for added hose) : (Vinyl hose)
  · Indicates number mark or change sequence, however, the code for the bulk part must be strictly 0 (zero).
- 50 — Types of code :
  · Fuel hose
  5 : Black inside braid
  2 : Red outside braid (3 mm inside dia. only)
  6 : Black
  3 : Red (3 mm inside dia. only)
  4 : Ash gray with red stripe (3 mm inside dia. only)
  · General hose
  1 : Ash gray
  2 : Ash gray
  3 : Black
  5 : Black
  · Vinyl hose
  1 : Clear
  2 : Black
  3 : Light red
  7 : Pale black
  6 : Light red
- 001 — Lengths : 001 : 1 m (standard)
  003 : 3 m
  008 : 8 m
  } Application or specification of some parts is not settled.
- 75 — I.D code : (fuel hose and general purpose hose)
  30 : 3.0 mm
  35 : 3.5 mm
  45 : 4.5 mm
  50 : 5.0 mm
  55 : 5.3 mm, 5.5 mm
  65 : 6.5 mm
  70 : 7.0 mm
  75 : 7.3 mm, 7.5 mm
  80 : 8.0 mm
  11 : 11 mm
  91 : 12 (outside dia. 15) mm
  92 : 12 (outside dia. 16) mm
  12 : 12 (outside dia. 17) mm
  14 : 14 mm
  17 : 17 mm
  ID./OD. code : (vinyl hose)
  01 : ID. 2.9, OD. 6.8 mm
  03 : ID. 3.0, OD. 6.0 mm
  05 : ID. 3.5, OD. 6.5 mm
  07 : ID. 4.0, OD. 7.0 mm
  08 : ID. 4.5, OD. 6.5 mm
  09 : ID. 4.5, OD. 8.0 mm
  12 : ID. 5.0, OD. 7.0 mm
  10 : ID. 5.0, OD. 8.0 mm
  11 : ID. 5.0, OD. 9.0 mm
  14 : ID. 6.0, OD. 9.0 mm
  17 : ID. 7.0, OD. 9.0 mm
  19 : ID. 7.0, OD. 11.0 mm
  21 : ID. 8.0, OD. 9.0 mm
  23 : ID. 8.0, OD. 12.0 mm
  25 : ID. 9.0, OD. 11.0 mm
  27 : ID. 9.0, OD. 13.0 mm
  33 : ID. 10.0, OD. 14.0 mm
  36 : ID. 11.0, OD. 13.0 mm
  37 : ID. 11.0, OD. 15.0 mm
  38 : ID. 12.0, OD. 13.0 mm
  39 : ID. 12.0, OD. 14.0 mm
  40 : ID. 12.0, OD. 16.0 mm
  43 : ID. 13.0, OD. 15.0 mm
  45 : ID. 14.0, OD. 18.0 mm
  50 : ID. 16.0, OD. 19.0 mm
  55 : ID. 17.5, OD. 20.5 mm
  60 : ID. 22.0, OD. 27.0 mm
- 9 — Hose type : 1 : Fuel hose
  5 : General hose
  3 : Vinyl hose

◎ **CAUTION: It is DANGEROUS to confuse the fuel hose with the general purpose hose or vinyl hose.**
Never use a general purpose hose or vinyl hose in place of a fuel hose or vice versa. Always use the correct bulk part in the parts catalogue, according to the service manual or the instructions issued with the bulk part.

B 7

How to use the flat rate time (F.R.T.)

This F.R.T. (Flat Rate Time) is used to determine the standard labor time allowed for replacement of parts covered by the warranty during the period the warranty is in effect. The F.R.T. for those parts which are not listed herein should be determined from the operation closely related to the replacement of that part.

1. The F.R.T. is based on the following servicing conditions

a. A liberal allowance is added to the net servicing time.

b. Standard times specified are based on the condition that the necessary servicing tools listed in the service manual which describes the HONDA service policy are available close at hand and the work performed by a mechanic with normal skill.

c. Time required for inspection and operational test following the servicing is included in the F.R.T.

d. The F.R.T. for "•" marked parts are same as the F.R.T. for the representative part above.

e. The F.R.T. shown with (*) includes engine removal and installation.

2. Method of computing

The job times are listed in tenth of an hour to simplify computation.

(Example) 0.3 = 18 minutes
5.6 = 5 hours and 36 minutes

CONVERSION CHART			
Hours	**Minutes**	**Hours**	**Minutes**
0.1	6	0.6	36
0.2	12	0.7	42
0.3	18	0.8	48
0.4	24	0.9	54
0.5	30	1.0	60

3. Computing the F.R.T.

When several jobs are performed at the same time, make the calculation in the following manner.
Parts and their F.R.T. described below are the sample and have no relation to the text.

a. Jobs of non duplicated nature

The F.R.T. for the job is obtained by totalling the F.R.T. for each part replaced.

(Example) Replacement of cylinder head gasket and flywheel carburetor.

Service item	F.R.T.
CYLINDER HEAD GASKET	0.1
FLYWHEEL CARBURETOR	0.3

The F.R.T. for the job is: 0.1+0.3=0.4

b. Jobs of duplicated nature

Take the F.R.T. for the last part to be replaced.

(Example) Replacement of piston and cylinder head gasket.

Service item	F.R.T.
CYLINDER HEAD GASKET	0.1
PISTON	1.5

The F.R.T. for the job is: 1.5

c. Jobs of partially related nature

Total up the F.R.T. for all of the parts replaced and then subtract the F.R.T. for the duplicated operation.

(Example) Replacement of valve, piston and cylinder head.

Service item	F.R.T.
VALVE	0.5
PISTON	1.5
CYLINDER HEAD	0.1

The F.R.T. for the job is: (0.5+1.5)−0.1=1.9

Cylinder head is the duplicated operations.

4. Adjustment, cleaning, removal and installation

Item	Service item	F.R.T.
Adjustment	Tappets	0.4
	Carburetor	0.2
	Governor	0.3
Cleaning	Carburetor	0.7
	Air cleaner	0.2
	Spark plug	0.1
Removal and installation	Engine,Generator Assy.	0.9

B 9

ENGINE GROUP

•Ref.No.on the index illustration may be different from that in the text.

C 1 Cylinder head

E−2

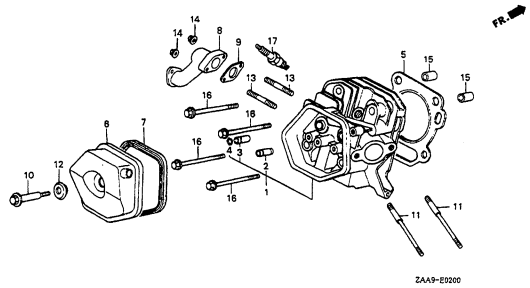

C 2 Cylinder barrel

E−3

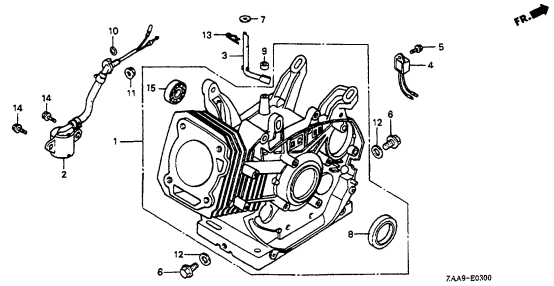

C 3 Crankcase cover

E−6

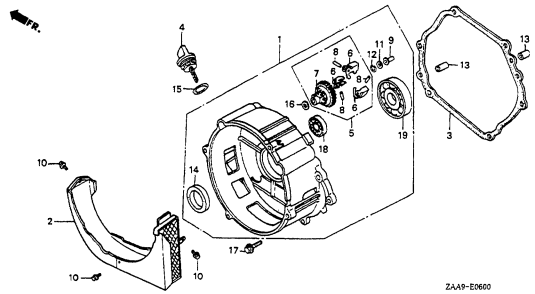

C 4 Crankshaft

E−7

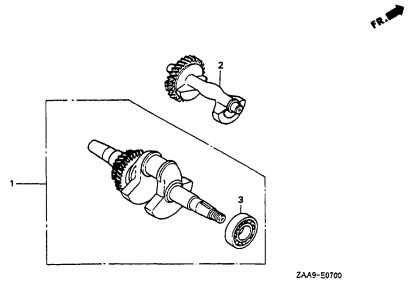

C 5 Piston

E−8

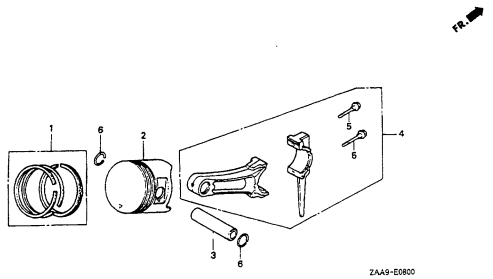

C 6 Camshaft

E−9

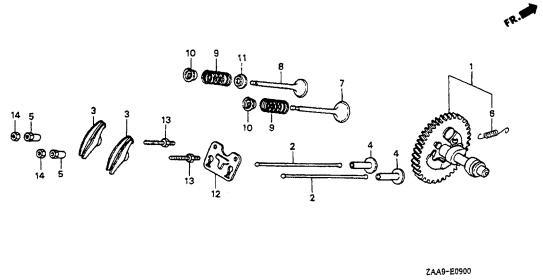

C 7 Fan cover

E−12

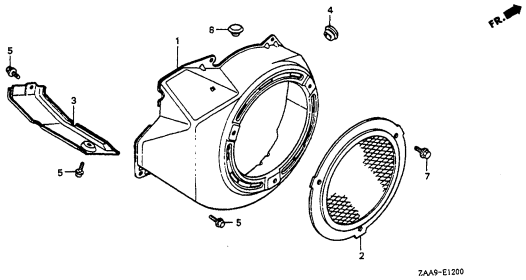

C 8 Carburetor

E−14

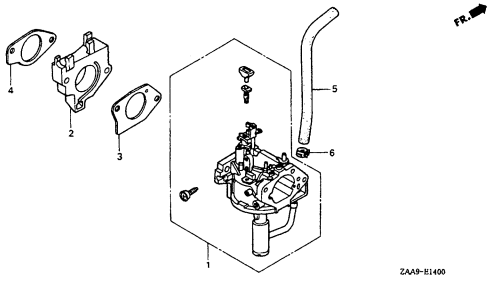

C 9 Flywheel

E−19

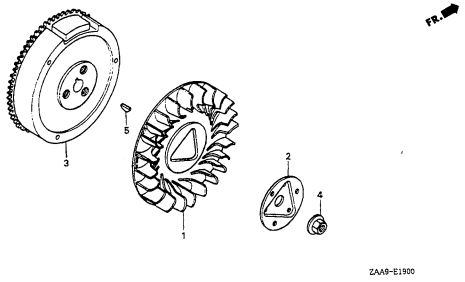

2

•Ref.No.on the index illustration may be different from that in the text.

C10 Ignition coil

E-20

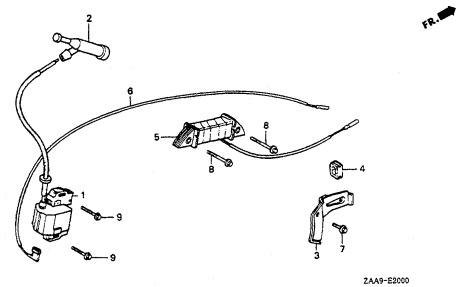

C11 Starter motor

E-21

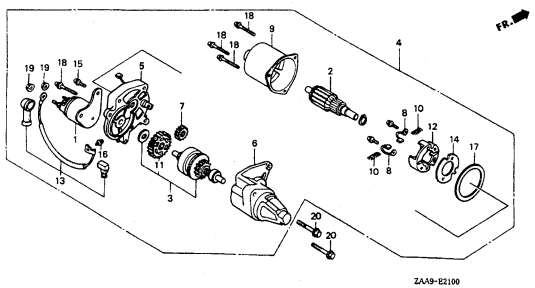

C12 Control

E-22

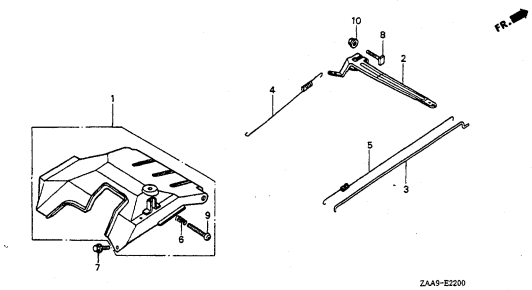

B 11

FRAME GROUP

[E]

•Ref.No.on the index illustration may be different from that in the text.

D 1 Control box

F−1

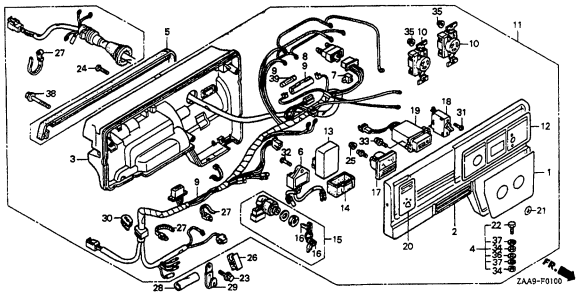

D 3 Air cleaner

F−14

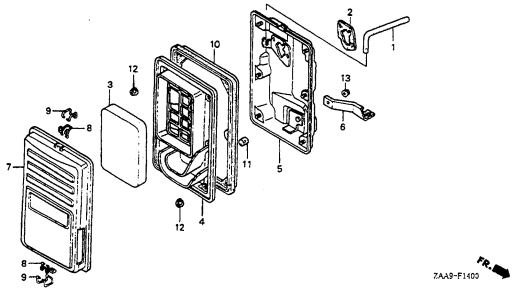

D 4 Muffler

F−15

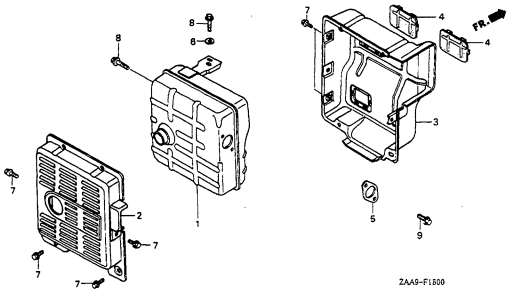

D 5 Top cover

F−17−10

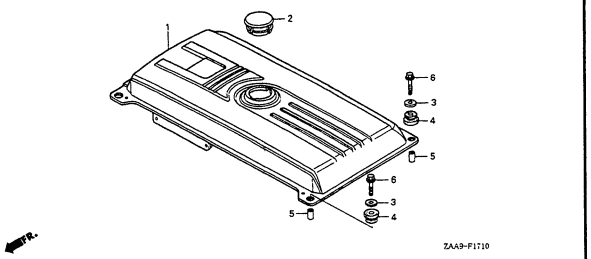

D 6 Fuel system

F−17−20

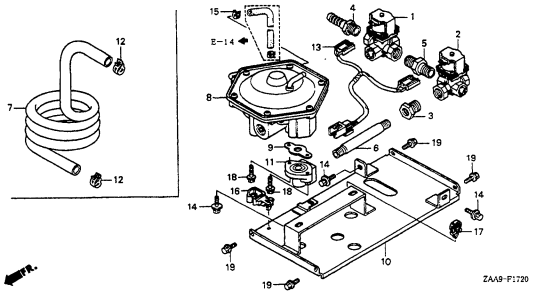

D 7 Battery tray

F−18

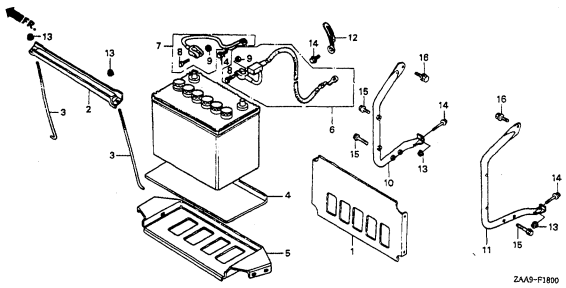

D 8 Frame

F−25

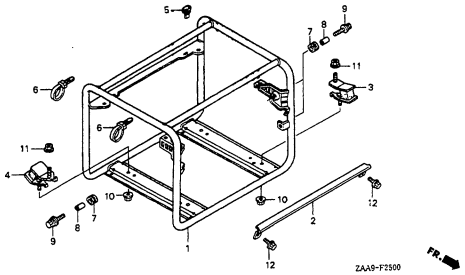

D 9 Rear housing

F−28

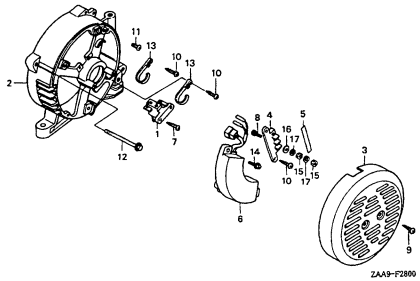

D10 Rotor/Stator

F−29

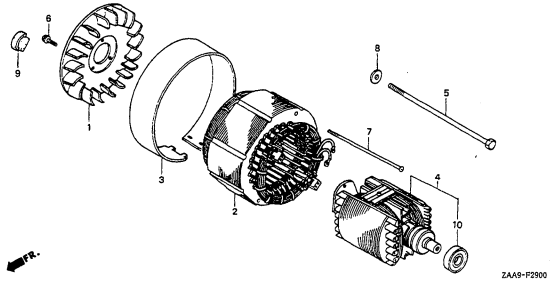

3

B 12

FRAME GROUP

[E]

•Ref.No.on the index illustration may be different from that in the text.

D11 Labels

F−31

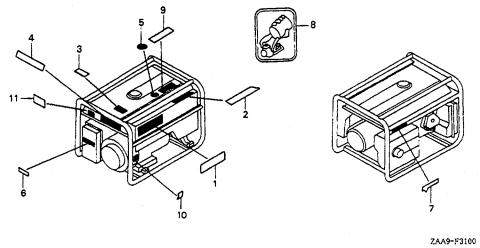

D12 Tools

F−32

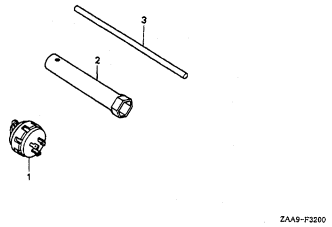

D13 Wheel

FOP−1

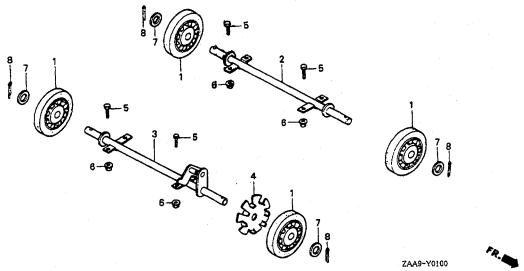

D14 Switch box

FOP−2

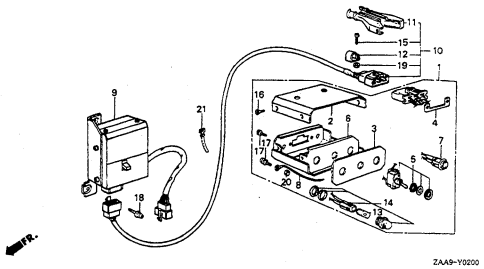

3

Cylinder head

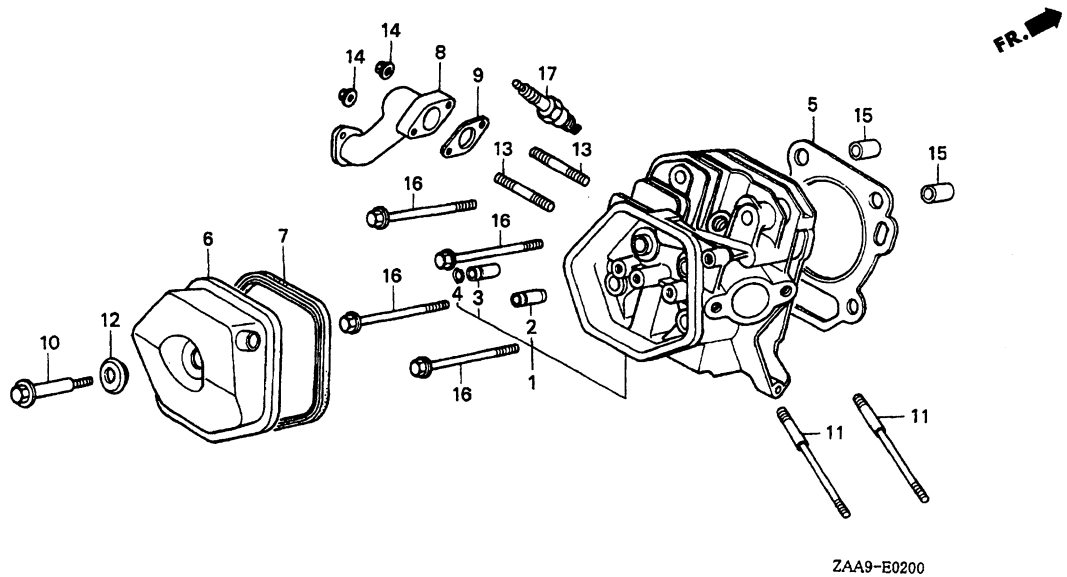

Service Item	F.R.T.
HEAD COMP., CYLINDER.....	1.4
GUIDE, IN. VALVE.....	1.3
(ADD 0.2 FOR EACH.)	
GASKET, CYLINDER HEAD.....	1.0
COVER COMP., HEAD.....	0.1
.PACKING, HEAD COVER	
.PLUG, SPARK	
PIPE, EX.....	0.4
.GASKET, EX. PIPE	
.BOLT, STUD, 8X32	
(ADD 0.1 FOR EACH.)	
BOLT, STUD, 8X106.....	0.2
(ADD 0.1 FOR EACH.)	

Ref. No.	Part No.	Description	Reqd.QTY EM 6000 GN	Serial No.	Type
1	12200-ZF6-F00	HEAD COMP., CYLINDER.....	1		
2	12204-ZE2-306	GUIDE, IN. VALVE (OVERSIZE)...	(1)		
3	12205-ZE2-305	GUIDE, EX. VALVE (OVERSIZE)...	(1)		
4	12216-ZE2-300	CLIP, VALVE GUIDE.....	1		
5	12251-ZF6-W00	GASKET, CYLINDER HEAD.....	1		
6	12310-ZE2-020	COVER COMP., HEAD.....	1		
7	12391-ZE2-020	PACKING, HEAD COVER.....	1		
8	18330-ZE3-700	PIPE, EX.....	1		
9	18333-ZE3-800	GASKET, EX. PIPE.....	1		
10	90014-ZE2-000	BOLT, HEAD COVER.....	1		
11	90042-ZE3-700	BOLT, STUD, 8X106.....	2		
12	90441-ZE2-010	WASHER COMP., HEAD COVER.....	1		
13	92900-08032-0E	BOLT, STUD, 8X32.....	2		
14	94050-08000	NUT, FLANGE, 8MM.....	2		
15	94301-12200	PIN, DOWEL, 12X20.....	2		
16	95725-10080-00	BOLT, FLANGE, 10X80.....	4		
17	98079-56846	PLUG, SPARK (BPR6ES NGK).....	1		

Cylinder barrel

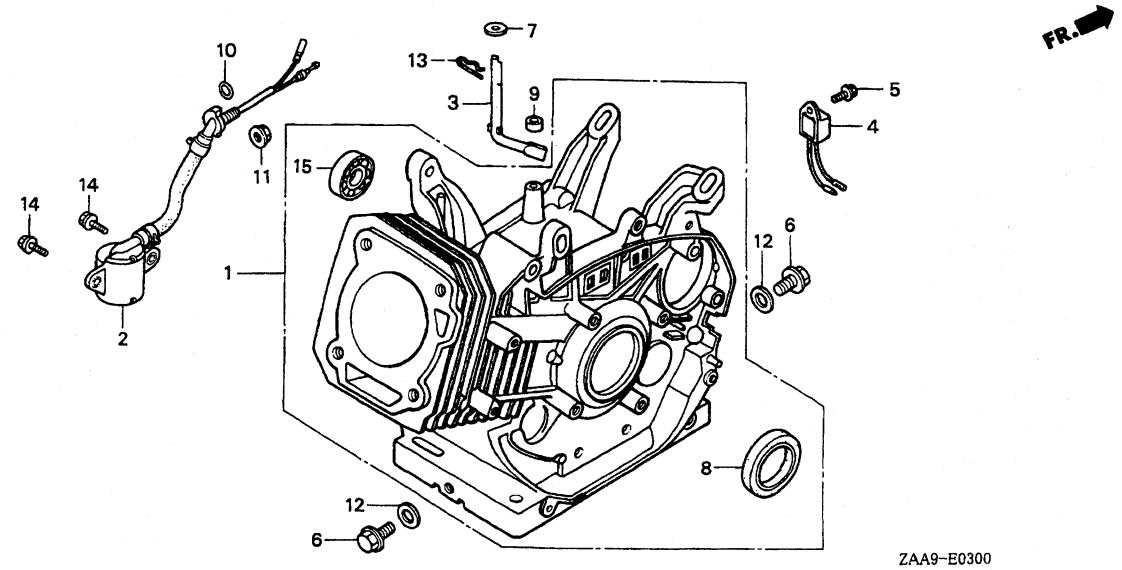

Service Item	F.R.T.
BARREL ASSY., CYLINDER.....	*2.7
SWITCH ASSY., OIL LEVEL.....	*1.5
.SHAFT, GOVERNOR ARM	
.O-RING, 14MM	
ALERT UNIT, OIL.....	0.1
WASHER, DRAIN PLUG, 12MM.....	0.2
BEARING, RADIAL BALL, 6202.....	*2.1

Ref. No.	Part No.	Description	Reqd.QTY EM 6000 GN	Serial No.	Type
1	12000-ZF6-L04	BARREL ASSY., CYLINDER.....	1		
2	15510-ZE2-043	SWITCH ASSY., OIL LEVEL.....	1		
3	16541-ZE3-010	SHAFT, GOVERNOR ARM.....	1		
4	34150-ZH7-003	ALERT UNIT, OIL.....	1		
5	90013-883-000	BOLT, FLANGE, 6X12 (CT200)....	1		
6	90131-883-000	BOLT, DRAIN PLUG.....	2		
7	90446-KE1-000	WASHER, 8.2X17X0.8.....	1		
8	91201-ZE3-004	OIL SEAL, 35X52X8.....	1		
9	91203-952-771	OIL SEAL, 8X14X5.....	1		
10	91353-671-004	O-RING, 14MM (NOK).....	1		
11	94050-10000	NUT, FLANGE, 10MM.....	1		
12	94109-12000	WASHER, DRAIN PLUG, 12MM.....	2		
13	94251-10000	PIN, LOCK, 10MM.....	1		
14	95701-06012-00	BOLT, FLANGE, 6X12.....	2		
15	96100-62020-00	BEARING, RADIAL BALL, 6202....	1		

1999.08.20 E

Crankcase cover

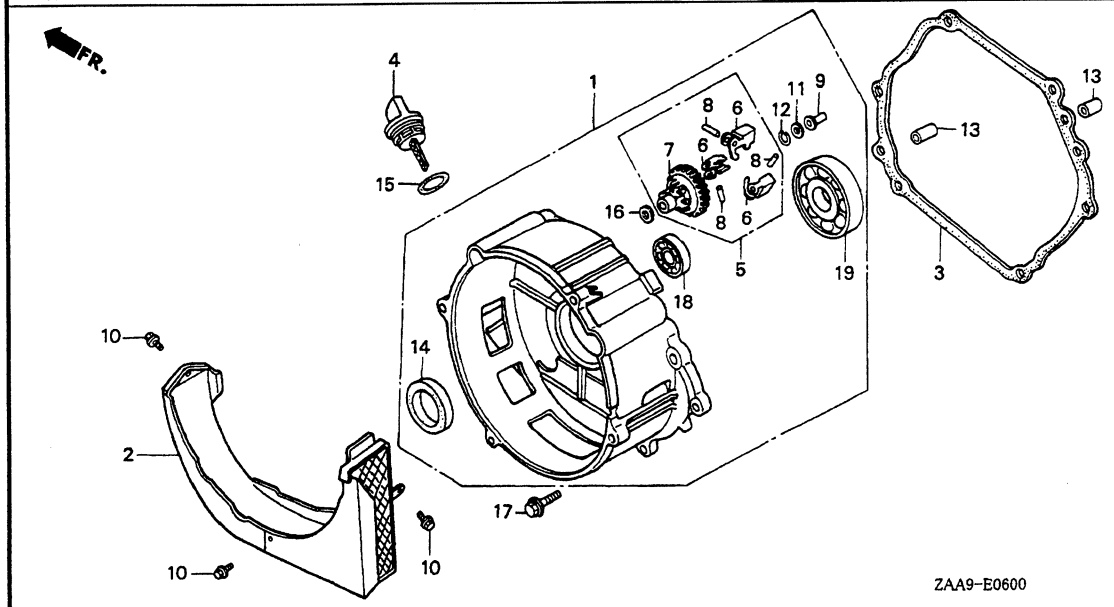

Service Item	F.R.T.
COVER ASSY., CRANKCASE.....	*1.3
.PACKING, CASE COVER	
.SLIDER, GOVERNOR	
.OIL SEAL, 35X52X8	
COVER, DUCT.....	0.1
HOLDER, GOVERNOR WEIGHT.....	*1.4
(INC. RELATIVE PART)	
.BEARING, RADIAL BALL, 6202	
.BEARING, RADIAL BALL, 6207	

Ref. No.	Part No.	Description	Reqd.QTY EM 6000 GN	Serial No.	Type
1	11300-ZF6-F00	COVER ASSY., CRANKCASE.....	1		
2	11315-ZE3-700	COVER, DUCT.....	1		
3	11381-ZE3-800	PACKING, CASE COVER.....	1		
4	15620-ZE2-700	CAP, OIL FILLER.....	1		
5	16510-ZE3-000	GOVERNOR ASSY.....	1		
6	16511-ZE8-000	WEIGHT, GOVERNOR.....	3		
7	16512-ZE3-000	HOLDER, GOVERNOR WEIGHT.....	1		
8	16513-ZE2-000	PIN, GOVERNOR WEIGHT.....	3		
9	16531-ZE2-000	SLIDER, GOVERNOR.....	1		
10	90019-883-000	BOLT, FLANGE, 5X10.....	3		
11	90473-147-000	WASHER, 6X16.....	1		
12	90602-ZE1-000	CLIP, GOVERNOR HOLDER.....	1		
13	90701-HC4-000	PIN, DOWEL, 8X12.....	2		
14	91201-ZE3-004	OIL SEAL, 35X52X8.....	1		
15	91301-805-000	O-RING, 26X2.7.....	1		
16	94101-06800	WASHER, PLAIN, 6MM.....	1		
17	95701-08040-00	BOLT, FLANGE, 8X40.....	7		
18	96100-62020-00	BEARING, RADIAL BALL, 6202....	1		
19	96100-62070-00	BEARING, RADIAL BALL, 6207....	1		

1999.08.20 E

Crankshaft

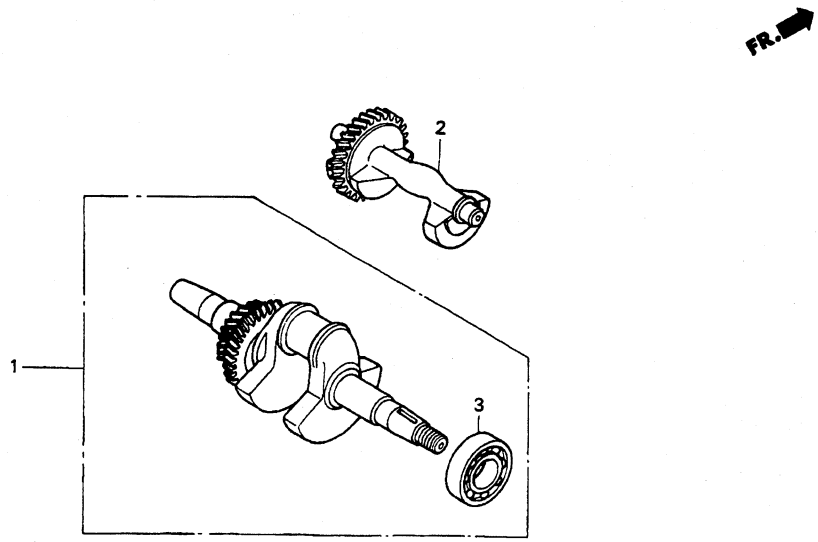

Service Item	F.R.T.
CRANKSHAFT COMP.....	*2.2
WEIGHT, BALANCER.....	*1.4
BEARING, RADIAL BALL, 6207S....	*2.3

Ref. No.	Part No.	Description	Reqd.QTY EM 6000 GN	Serial No.	Type
1	13310-ZF6-D40	CRANKSHAFT COMP.....	1		
2	13351-ZE3-010	WEIGHT, BALANCER.....	1		
3	91001-ZF6-003	BEARING, RADIAL BALL, 6207S...	1		

Piston

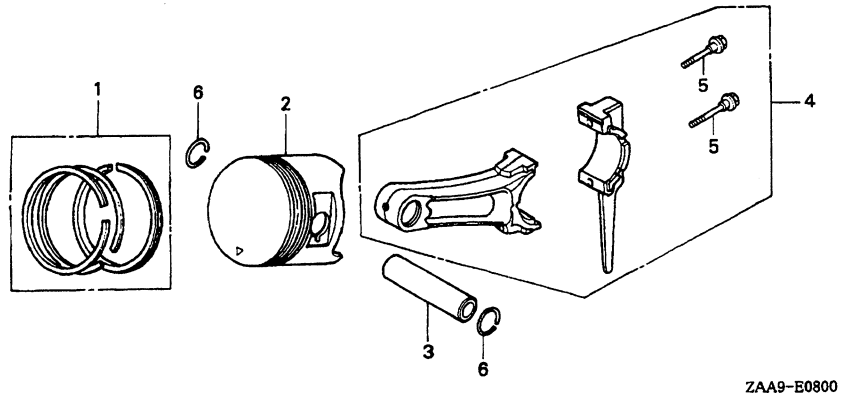

Service Item	F.R.T.
RING SET, PISTON.....	*2.3
.PISTON	
ROD ASSY., CONNECTING.....	*2.2

Ref. No.	Part No.	Description	Reqd.QTY EM 6000 GN	Serial No.	Type
1	13010-ZF6-003	RING SET, PISTON (STD.) (NIPPON)	1		
	13010-ZF6-005	RING SET, PISTON (STD.) (TEIKOKU)	1		
	13011-ZF6-003	RING SET, PISTON (0.25) (NIPPON)	(1)		
	13011-ZF6-005	RING SET, PISTON (0.25) (TEIKOKU)	(1)		
	13012-ZF6-003	RING SET, PISTON (0.50) (NIPPON)	(1)		
	13012-ZF6-005	RING SET, PISTON (0.50) (TEIKOKU)	(1)		
	13013-ZF6-003	RING SET, PISTON (0.75) (NIPPON)	(1)		
	13013-ZF6-005	RING SET, PISTON (0.75) (TEIKOKU)	(1)		
2	13101-ZF6-W00	PISTON (STD.).....	1		
	13102-ZF6-W00	PISTON (0.25).....	(1)		
	13103-ZF6-W00	PISTON (0.50).....	(1)		
	13104-ZF6-W00	PISTON (0.75).....	(1)		
3	13111-ZF6-W00	PIN, PISTON.....	1		
4	13200-ZE3-010	ROD ASSY., CONNECTING (STD.)..	1		
	13200-ZE3-315	ROD ASSY., CONNECTING (0.25 UNDER SIZE)	(1)		
5	90001-ZE8-000	BOLT, CONNECTING ROD.....	2		
6	90601-ZE3-000	CLIP, PISTON PIN, 20MM.....	2		

1999.08.20 E

Camshaft

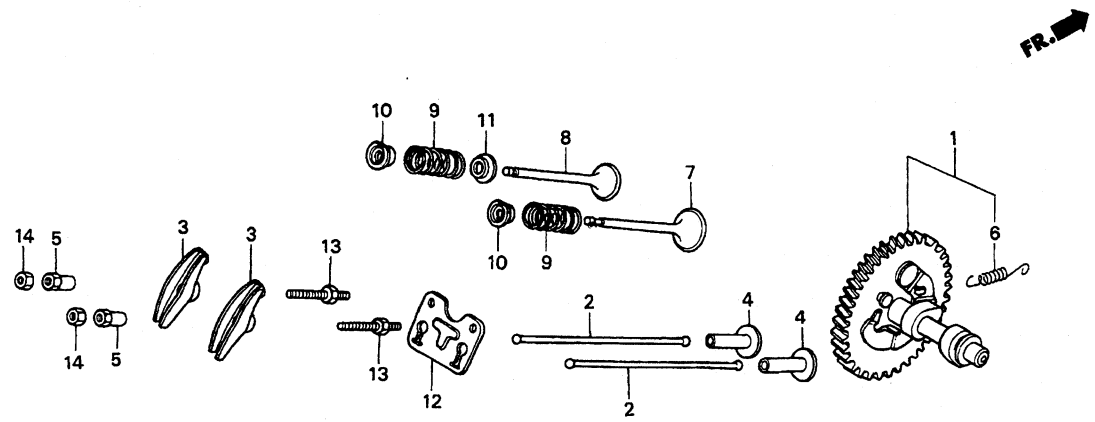

Service Item	F.R.T.
CAMSHAFT ASSY.....	*1.5
.LIFTER, VALVE	
ROD, PUSH.....	0.2
.ARM, VALVE ROCKER	
(ADD 0.1 FOR EACH.)	
VALVE, IN.....	1.2
(ADD 0.1 FOR EACH.)	

Ref. No.	Part No.	Description	Reqd.QTY EM 6000 GN	Serial No.	Type
1	14100-ZF6-W01	CAMSHAFT ASSY.....	1		
2	14410-ZE3-013	ROD, PUSH.....	2		
3	14431-ZE2-010	ARM, VALVE ROCKER.....	2		
4	14441-ZE2-000	LIFTER, VALVE.....	2		
5	14451-ZE1-013	PIVOT, ROCKER ARM.....	2		
6	14568-ZE1-000	SPRING, WEIGHT RETURN.....	1		
7	14711-ZF6-F00	VALVE, IN. (GAS).....	1		
8	14721-ZF6-F00	VALVE, EX. (GAS).....	1		
9	14751-ZE2-003	SPRING, VALVE.....	2		
10	14771-ZE2-000	RETAINER, IN. VALVE SPRING....	2		
11	14775-ZE2-010	SEAT, VALVE SPRING.....	1		
12	14791-ZE2-010	PLATE, PUSH ROD GUIDE.....	1		
13	90012-ZE0-010	BOLT, PIVOT (8MM).....	2		
14	90206-ZE1-000	NUT, PIVOT ADJUSTING.....	2		

Fan cover

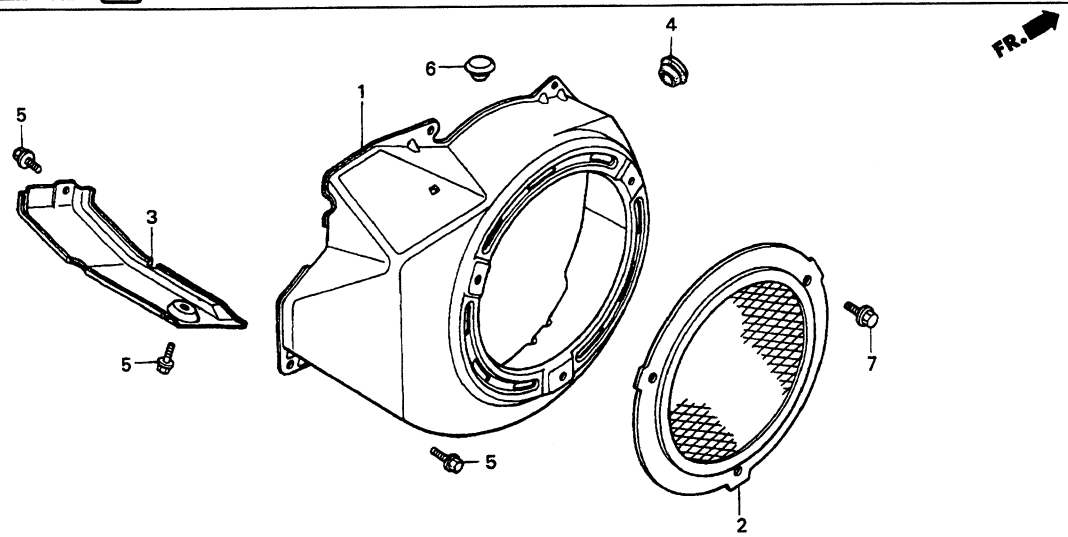

Service Item	F.R.T.
COVER COMP., FAN.....	0.4
SHROUD.....	0.1

Ref. No.	Part No.	Description	Reqd.QTY EM 6000 GN	Serial No.	Type
1	19610-ZF6-F00ZA	COVER COMP., FAN *NH1*.....BLACK	1		
2	19620-ZE3-L60ZA	PROTECTOR COMP., FAN COVER *NH1*.....BLACK	1		
3	19631-ZE3-W00	SHROUD.....	1		
4	81329-567-020	GROMMET, DRAIN HOLE.....	1		
5	90013-883-000	BOLT, FLANGE, 6X12 (CT200).....	6		
6	90851-SA6-000	PLUG, HOLE.....	1		
7	95701-06008-00	BOLT, FLANGE, 6X8.....	3		

1999.08.20 E

Carburetor

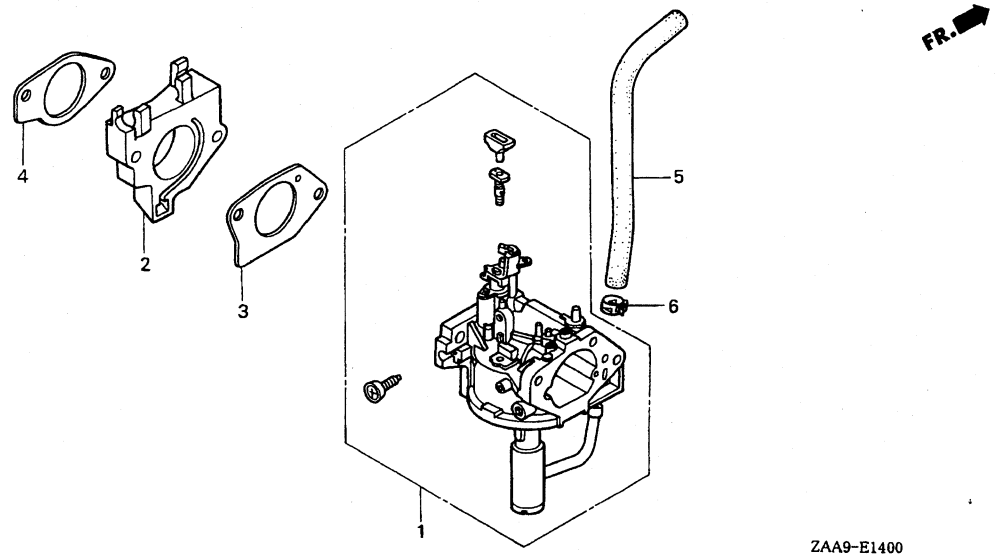

Service Item	F.R.T.
CARBURETOR ASSY.....	0.3
.INSULATOR, CARBURETOR	
.PACKING, CARBURETOR	
.PACKING, INSULATOR	
HOSE, FUEL.....	0.1

Ref. No.	Part No.	Description	Reqd.QTY EM 6000 GN	Serial No.	Type
1	16100-ZF6-F01	CARBURETOR ASSY. (BEL5C A)....	1		
2	16211-ZF6-000	INSULATOR, CARBURETOR.....	1		
3	16221-ZF6-800	PACKING, CARBURETOR.....	1		
4	16223-ZE3-W00	PACKING, INSULATOR.....	1		
5	16347-ZF6-F00	HOSE, FUEL (B).....	1		
6	90678-MN5-000	CLIP, FUEL HOSE.....	1		

Flywheel

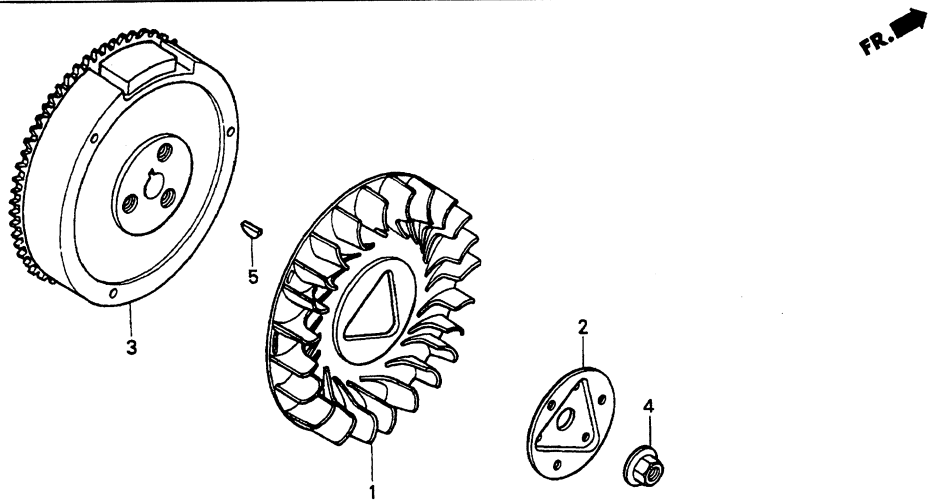

ZAA9-E1900

Service Item	F.R.T.
FAN, COOLING.....	0.4
.PLATE, COOLING FAN SETTING	
FLYWHEEL COMP.....	0.5

Ref. No.	Part No.	Description	Reqd.QTY EM 6000 GN	Serial No.	Type
1	19511-ZE3-000	FAN, COOLING.....	1		
2	19512-ZE2-000	PLATE, COOLING FAN SETTING....	1		
3	31100-ZF6-F00	FLYWHEEL COMP. (4POLE).....	1		
4	90201-ZE3-V00	NUT, SPECIAL, 16MM.....	1		
5	90741-ZE2-000	KEY, SPECIAL WOODRUFF, 25X18..	1		

Ignition coil

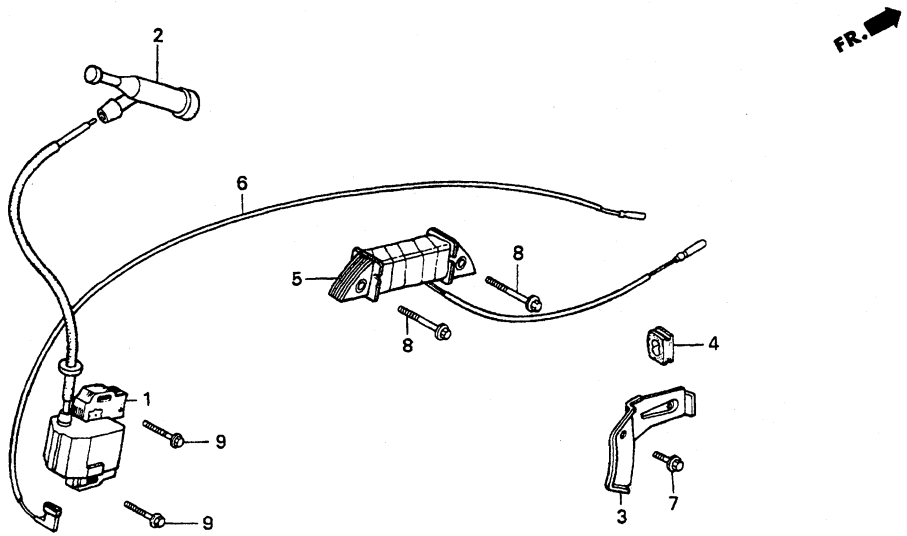

Service Item	F.R.T.
COIL ASSY., IGNITION.....	0.4
CAP ASSY., NOISE SUPPRESSOR....	0.1
COIL ASSY., CHARGE.....	0.5
.CORD, STOP SWITCH	

Ref. No.	Part No.	Description	Reqd.QTY EM 6000 GN	Serial No.	Type
1	30500-ZE2-023	COIL ASSY., IGNITION.....	1		
2	30700-ZE1-013	CAP ASSY., NOISE SUPPRESSOR (NICHIWA Y-EZ RTFM256)	1		
3	31511-ZE3-000	CLAMPER, CORD.....	1		
4	31512-ZE2-000	GROMMET, CORD.....	1		
5	31630-ZF5-003	COIL ASSY., CHARGE.....	1		
6	36101-ZE3-800	CORD, STOP SWITCH (470MM).....	1		
7	90013-883-000	BOLT, FLANGE, 6X12 (CT200)....	1		
8	90014-ZE6-000	BOLT, FLANGE, 6X35.....	2		
9	90015-883-000	BOLT, FLANGE, 6X28.....	2		

Starter motor

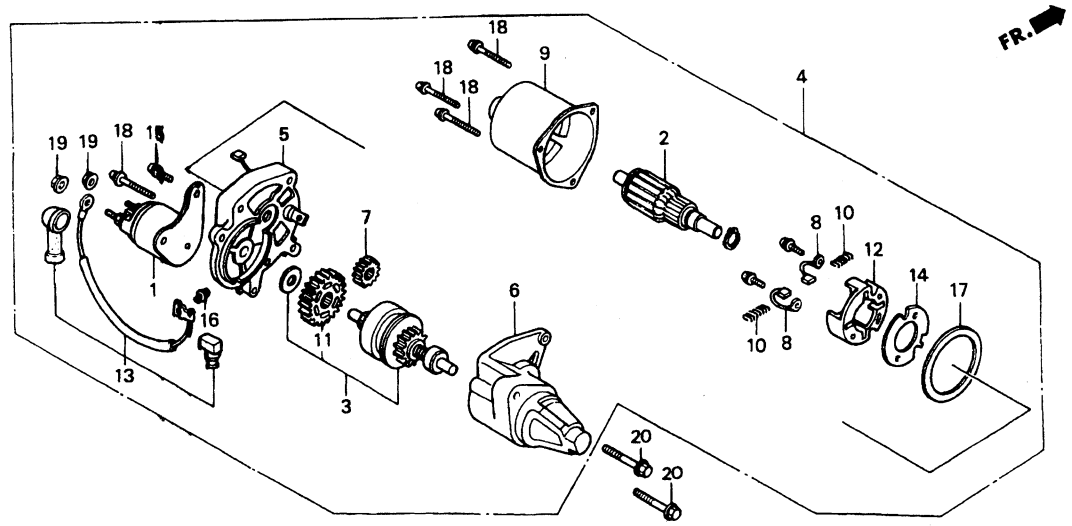

Service Item	F.R.T.
CONTACTOR ASSY.....	0.3
ARMATURE COMP.....	0.8
.BRACKET, CENTER	
.BRUSH	
.HOLDER, BRUSH	
CLUTCH COMP., OVERRUNNING.....	0.6
.BRACKET, FR.	
.GEAR, DRIVE PINION	
.GEAR, REDUCTION	
MOTOR UNIT, STARTER.....	0.5
YOKE COMP.....	0.7

Ref. No.	Part No.	Description	Reqd.QTY EM 6000 GN	Serial No.	Type
1	31204-ZA0-003	CONTACTOR ASSY.....	1		
2	31206-ZE3-003	ARMATURE COMP.....	1		
3	31207-ZE3-003	CLUTCH COMP., OVERRUNNING.....	1		
4	31210-ZE3-013	MOTOR UNIT, STARTER.....	1		
5	31211-ZE2-003	BRACKET, CENTER.....	1		
6	31212-ZE3-003	BRACKET, FR.....	1		
7	31213-ZE2-003	GEAR, DRIVE PINION.....	1		
8	31215-ZE2-003	BRUSH.....	2		
9	31218-ZE3-003	YOKE COMP.....	1		
10	31219-ZE2-003	SPRING, BRUSH RETURN.....	4		
11	31222-ZE3-791	GEAR, REDUCTION.....	1		
12	31231-ZE2-003	HOLDER, BRUSH.....	1		
13	31232-ZE3-003	WIRE, WATER COVER.....	1		
14	31233-ZE2-003	INSULATOR.....	1		
15	90007-ZE2-003	BOLT-WASHER, 5X14.....	2		
16	90110-ZE2-003	SCREW-WASHER, 4X6.....	1		
17	91601-ZE2-003	PACKING.....	1		
18	93892-05032-18	SCREW-WASHER, 5X32.....	4		
19	94070-06080	NUT-WASHER, 6MM.....	2		
20	95701-08035-08	BOLT, FLANGE, 8X35.....	2		

Control

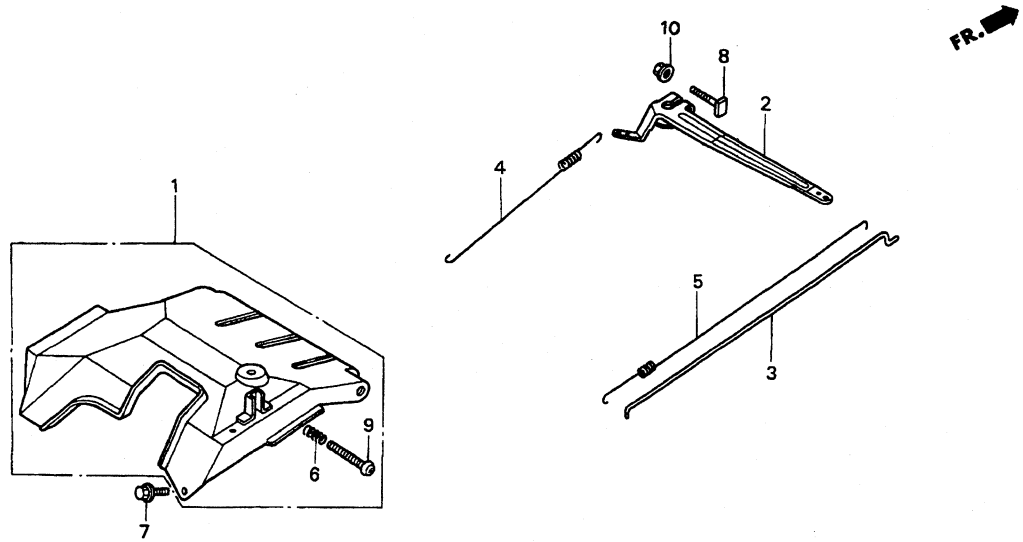

Service Item	F.R.T.
CONTROL ASSY.....	0.6
ARM, GOVERNOR.....	0.3
.ROD, GOVERNOR	
.SPRING, THROTTLE RETURN	
SPRING, GOVERNOR.....	0.2

Ref. No.	Part No.	Description	Reqd.QTY EM 6000 GN	Serial No.	Type
1	16500-ZF6-F00	CONTROL ASSY.....	1		
2	16551-ZE3-000	ARM, GOVERNOR.....	1		
3	16555-ZE3-000	ROD, GOVERNOR.....	1		
4	16561-ZE3-000	SPRING, GOVERNOR.....	1		
5	16562-ZE3-000	SPRING, THROTTLE RETURN.....	1		
6	16584-883-300	SPRING, CONTROL ADJUSTING.....	1		
7	90013-883-000	BOLT, FLANGE, 6X12 (CT200)....	2		
8	90015-ZE5-010	BOLT, GOVERNOR ARM.....	1		
9	93500-05035-0A	SCREW, PAN, 5X35.....	1		
10	94050-06000	NUT, FLANGE, 6MM.....	1		

Control box

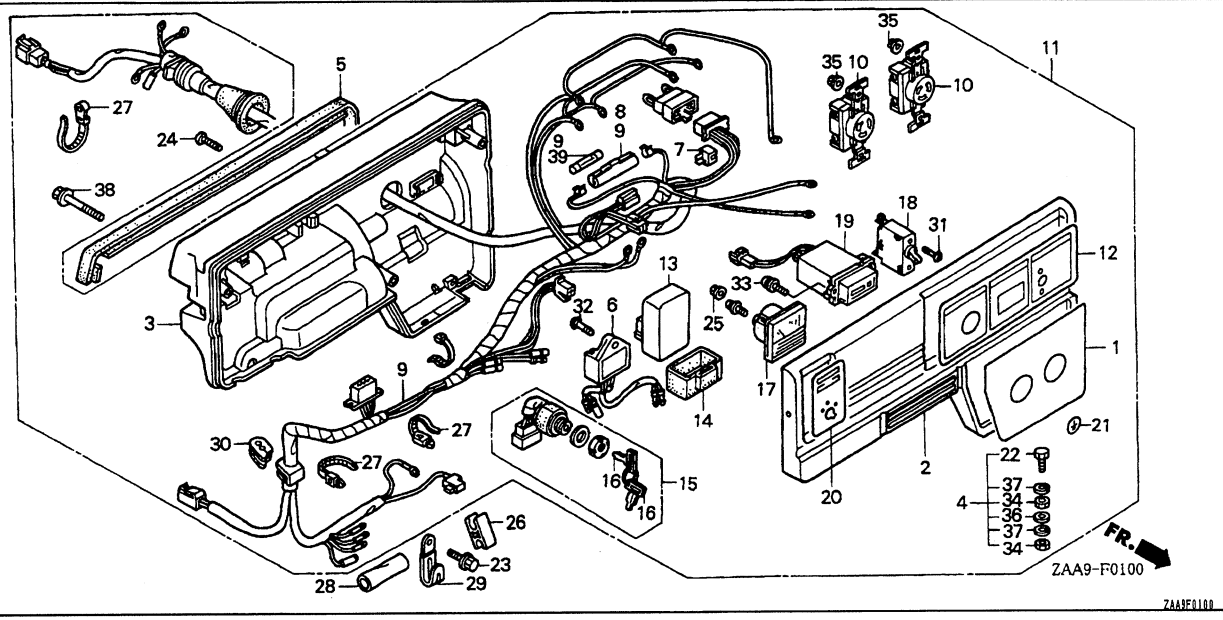

Service Item	F.R.T.
PANEL, CONTROL.....	0.6
.CONSENT	
.BREAKER, CIRCUIT	
CASE, CONTROL.....	0.4
RUBBER, CONTROL.....	0.2
.MARK, PANEL SWITCH	
RECTIFIER ASSY., REGULATOR.....	0.5
.UNIT COMP., VALVE CONTROL	
.SWITCH ASSY., COMBINATION	
.VOLTMETER ASSY.	
.METER ASSY., HOUR	
HARNESS ASSY., CONTROL WIRE....	1.0
BOX ASSY., CONTROL.....	0.3
FUSE B.....	0.1

Ref. No.	Part No.	Description	Reqd.QTY EM 6000 GN	Serial No.	Type
1	31408-ZP0-H61	MARK, A.C. OUTPUT (EP-R).....	1		
2	31420-ZAA-K61ZA	PANEL, CONTROL *R8*.....BRIGHT RED	1		
3	31425-ZP0-H61	CASE, CONTROL (EP).....	1		
4	31428-ZB4-013	TERMINAL SET, EARTH.....	1		
5	31462-ZB4-000	RUBBER, CONTROL.....	1		
6	31620-881-A02	RECTIFIER ASSY., REGULATOR....	1		
7	31700-166-008	RECTIFIER COMP., SILICON.....	1		
8	32114-230-003	CASE, FUSE CONNECTOR (SUMITOMO)	1		
9	32150-ZAA-K61	HARNESS ASSY., CONTROL WIRE...	1		
10	32331-880-680	CONSENT (20A 250V).....	2		
11	32340-ZAA-K61ZA	BOX ASSY., CONTROL *R8*.....BRIGHT RED	1		
12	32366-ZAA-K60	MARK, PANEL SWITCH.....	1		
13	34341-ZAA-K61	UNIT COMP., VALVE CONTROL.....	1		
14	34343-ZAA-K61	CUSHION, VALVE CONTROL UNIT...	1		
15	35100-ZA0-013	SWITCH ASSY., COMBINATION.....	1		
16	35111-880-003	KEY COMP.....	2		
17	37450-ZD8-F61	VOLTMETER ASSY.....	1		
18	38220-ZAA-K61	BREAKER, CIRCUIT (19A).....	1		
19	39700-ZC6-003	METER ASSY., HOUR.....	1		
20	87501-ZP0-F21	MARK, ENGINE SWITCH (EP-LD)...	1		
21	87534-892-640	MARK, EARTH.....	1		
22	90011-899-840	BOLT, HEX., 6X28.....	1		

1999.08.20 E

Control box

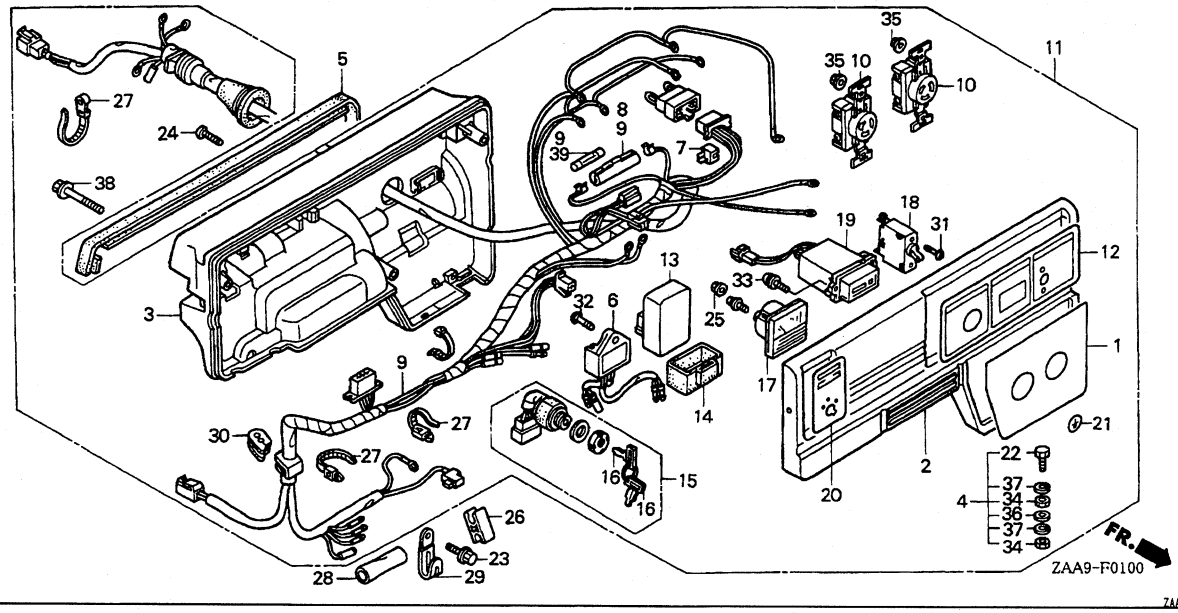

Service Item	F.R.T.

Ref. No.	Part No.	Description	Reqd.QTY EM 6000 GN	Serial No.	Type
23	90013-883-000	BOLT, FLANGE, 6X12 (CT200)....	1		
24	90101-692-000	SCREW, GLOVE BOX.....	1		
25	90201-ZB4-003	NUT, FLANGE, 3MM.....	2		
26	90650-ZB4-621	CLIP, TUBE.....	1		
27	90672-ZB4-003	TIE, CABLE.....	3		
28	91406-ZAA-K60	TUBE, CORD.....	1		
29	91406-671-000	CLIP, WIRE HARNESS.....	1		
30	91601-ZB4-003	GROMMET, TUBE.....	1		
31	93500-03006-1G	SCREW, PAN, 3X6.....	2		
32	93500-06020-1G	SCREW, PAN, 6X20.....	1		
33	93893-05016-18	SCREW-WASHER, 5X16.....	2		
34	94001-06390-0S	NUT, HEX., 6MM.....	2		
35	94050-04000	NUT, FLANGE, 4MM.....	4		
36	94101-06800	WASHER, PLAIN, 6MM.....	1		
37	94111-06800	WASHER, SPRING, 6MM.....	2		
38	95701-06040-18	BOLT, FLANGE, 6X40.....	3		
39	98200-21000	FUSE B (10A).....	1		

Air cleaner

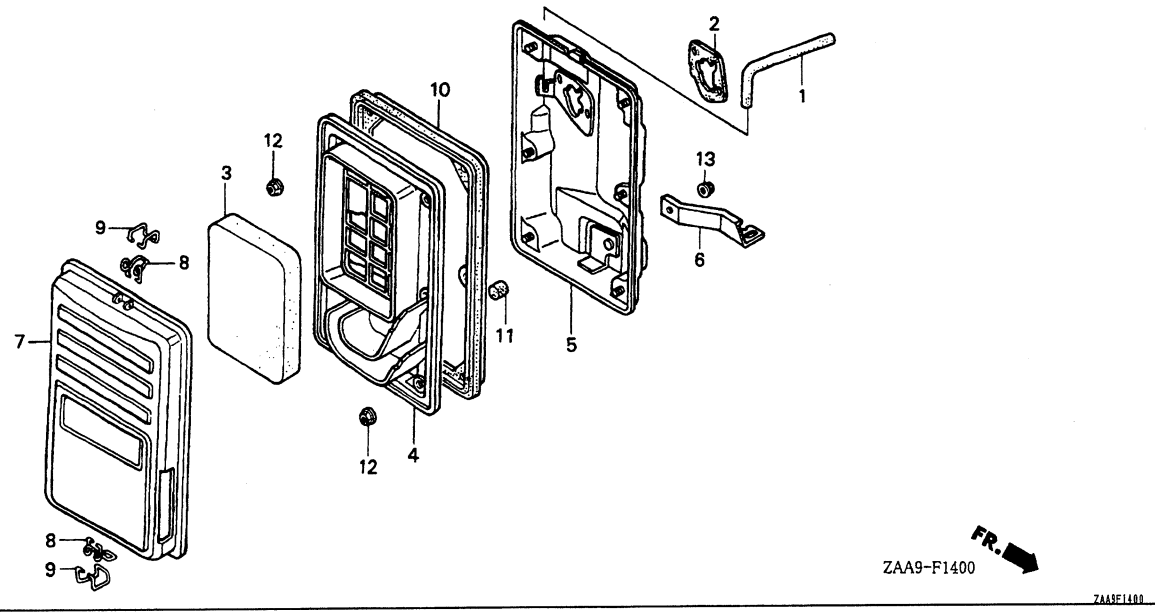

Service Item	F.R.T.
TUBE, BREATHER.....	0.1
.ELEMENT, AIR CLEANER	
.CLIP A, AIR CLEANER WIRE	
SPACER COMP., CARBURETOR.....	0.2
.SEPARATOR, AIR CLEANER	
.CASE COMP., AIR CLEANER	
.SEAL, AIR CLEANER	

Ref. No.	Part No.	Description	Reqd.QTY EM 6000 GN	Serial No.	Type
1	15721-ZB4-000	TUBE, BREATHER.....	1		
2	16220-ZA0-702	SPACER COMP., CARBURETOR.....	1		
3	17211-899-000	ELEMENT, AIR CLEANER.....	1		
4	17212-ZB4-003	SEPARATOR, AIR CLEANER.....	1		
5	17220-ZAA-K61	CASE COMP., AIR CLEANER.....	1		
6	17222-ZC2-000	STAY, AIR CLEANER.....	1		
7	17231-899-000	COVER COMP., AIR CLEANER.....	1		
8	17235-899-000	CLIP A, AIR CLEANER WIRE.....	2		
9	17236-899-000	CLIP B, AIR CLEANER WIRE.....	2		
10	17252-899-000	SEAL, AIR CLEANER.....	1		
11	17367-413-690	FILTER, DRAIN TUBE.....	1		
12	94050-05000	NUT, FLANGE, 5MM.....	6		
13	94050-06000	NUT, FLANGE, 6MM.....	1		

Muffler

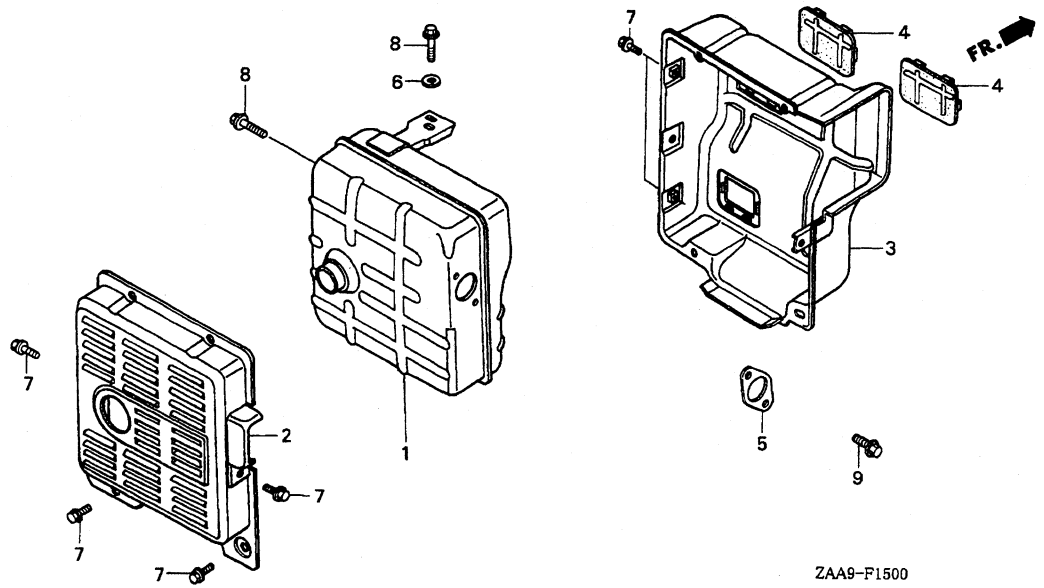

Service Item	F.R.T.
MUFFLER COMP.....	0.3
.PROTECTOR, MUFFLER INNER	
.SEAL, MUFFLER PROTECTOR	
GASKET, EX. PIPE.....	0.2

Ref. No.	Part No.	Description	Reqd.QTY EM 6000 GN	Serial No.	Type
1	18310-ZD1-E31	MUFFLER COMP.....	1		
2	18320-ZC2-000	PROTECTOR, MUFFLER OUTER.....	1		
3	18325-ZB4-000	PROTECTOR, MUFFLER INNER.....	1		
4	18329-ZB4-000	SEAL, MUFFLER PROTECTOR.....	2		
5	18333-ZB4-800	GASKET, EX. PIPE.....	1		
6	94103-08000	WASHER, PLAIN, 8MM.....	1		
7	95701-06010-00	BOLT, FLANGE, 6X10.....	8		
8	95701-08016-08	BOLT, FLANGE, 8X16.....	2		
9	95701-08020-00	BOLT, FLANGE, 8X20.....	2		

Top cover

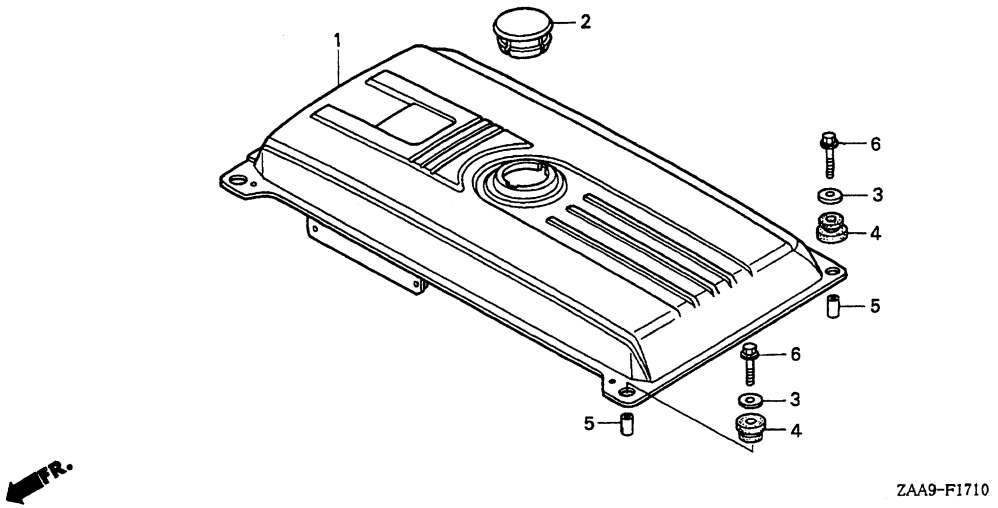

Service Item	F.R.T.
COVER COMP., TOP.....	0.3

Ref. No.	Part No.	Description	Reqd.QTY EM 6000 GN	Serial No.	Type
1	63110-ZAA-K61	COVER COMP., TOP.....	1		
2	63113-ZAA-K60	CAP, GENERATOR TOP COVER.....	1		
3	90503-898-000	WASHER, TANK CUSHION.....	4		
4	90851-898-000	RUBBER, TANK CUSHION.....	4		
5	91551-898-000	COLLAR, TANK CUSHION.....	4		
6	95701-06022-00	BOLT, FLANGE, 6X22.....	4		

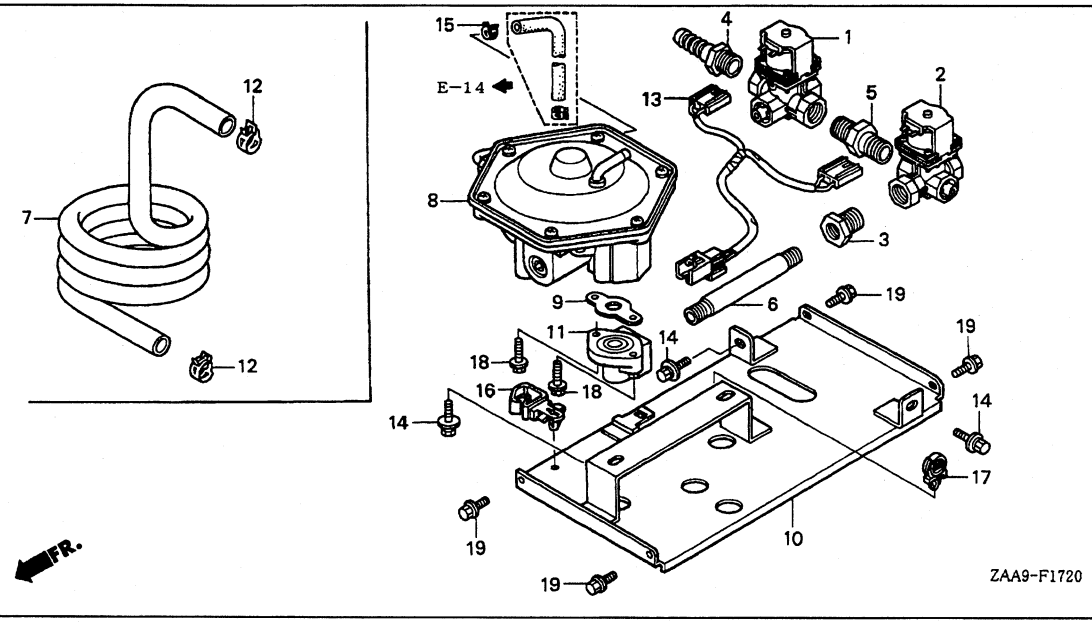

Service Item	F.R.T.
VALVE ASSY., SOLENOID.....	0.7
(ADD 0.2 FOR EACH.)	
.NIPPLE	
BUSHING.....	0.6
.JOINT, IN. PIPE	
.ZERO GOVERNOR ASSY.	
.PACKING, ZERO GOVERNOR	
.STAY COMP., ZERO GOVERNOR	
.PIPE COMP., IN.	
JOINT, HOSE.....	0.2
HOSE, FUEL EXTENSION.....	0.1
.HARNESS ASSY., SOLENOID VALVE	

Ref. No.	Part No.	Description	Reqd.QTY EM 6000 GN	Serial No.	Type
1	16200-ZF6-F01	VALVE ASSY., SOLENOID (A).....	1		
2	16201-ZF6-F01	VALVE ASSY., SOLENOID (B).....	1		
3	16234-ZF6-F00	BUSHING (1/2X3/8).....	1		
4	16236-ZF6-F00	JOINT, HOSE (16MM).....	1		
5	16238-ZF6-F00	NIPPLE (1/2).....	1		
6	16239-ZF6-F00	JOINT, IN. PIPE.....	1		
7	16348-ZAA-K60	HOSE, FUEL EXTENSION.....	(1)		
8	16380-ZF6-F01	ZERO GOVERNOR ASSY.....	1		
9	16382-ZF6-F00	PACKING, ZERO GOVERNOR.....	1		
10	16387-ZAA-K60	STAY COMP., ZERO GOVERNOR.....	1		
11	17110-ZF6-F00	PIPE COMP., IN.....	1		
12	19513-PE0-003	CLAMP, WATER HOSE (21.7MM) (CHUO HATSUJO)	(2)		
13	32173-ZAA-K60	HARNESS ASSY., SOLENOID VALVE.	1		
14	90132-SP0-000	BOLT-WASHER, 6X16.....	4		
15	90678-MN5-000	CLIP, FUEL HOSE.....	1		
16	90678-ZA0-601	CLIP, HARNESS (5MM-15MM) (BLACK)	1		
17	90684-ZA0-601	CLIP, HARNESS.....	1		
18	93401-06025-00	BOLT-WASHER, 6X25.....	2		
19	95701-06010-00	BOLT, FLANGE, 6X10.....	4		

1999.08.20 E

Battery tray

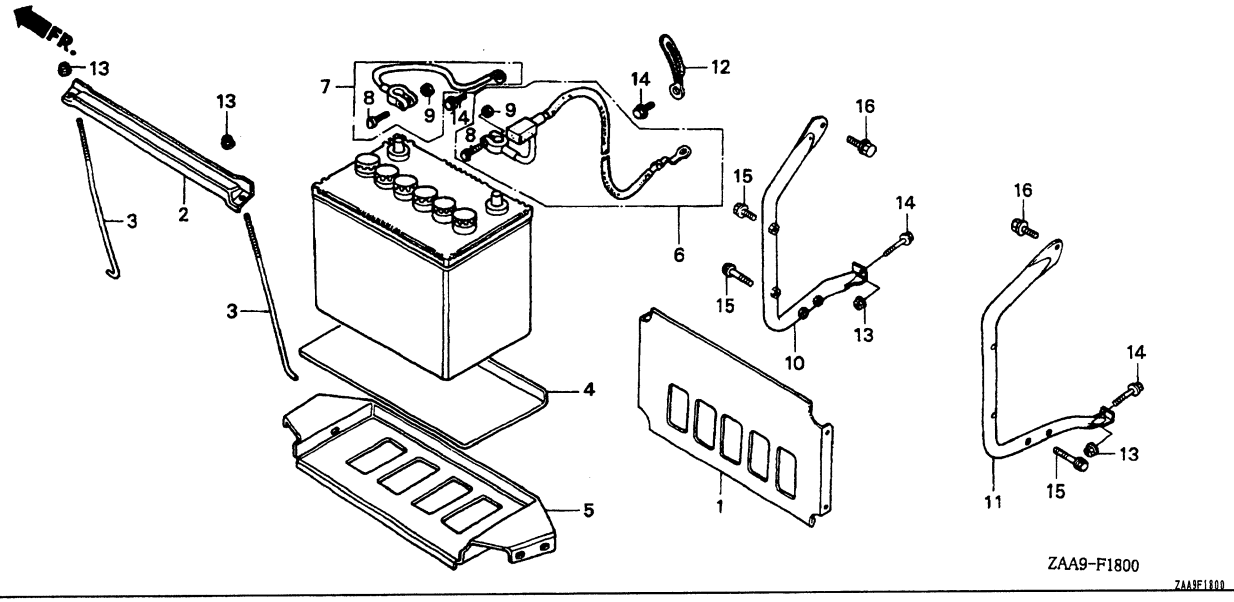

Service Item	F.R.T.
PLATE, BATTERY GUARD.....	0.1
.CABLE ASSY., STARTING	
.CABLE ASSY., EARTH	
BASE, BATTERY TRAY.....	0.2
.GUARD, FR. BATTERY	
.GUARD, RR. BATTERY	

Ref. No.	Part No.	Description	Reqd.QTY EM 6000 GN	Serial No.	Type
1	31511-ZB4-000	PLATE, BATTERY GUARD.....	1		
2	31512-880-810	PLATE, BATTERY SETTING.....	1		
3	31513-634-000	BOLT, BATTERY SETTING, 220MM..	2		
4	31521-880-000	PLATE, BATTERY.....	1		
5	31550-899-000	BASE, BATTERY TRAY.....	1		
6	32410-ZB4-620	CABLE ASSY., STARTING.....	1		
7	32430-ZB4-620	CABLE ASSY., EARTH.....	1		
8	32601-SK7-900	BOLT, BATTERY TERMINAL.....	2		
9	32602-SK7-900	NUT, BATTERY TERMINAL.....	2		
10	50365-ZD1-E30ZA	GUARD, FR. BATTERY *NH105*...MAT BLACK (#15-#20)	1		
11	50375-ZD1-E30ZA	GUARD, RR. BATTERY *NH105*...MAT BLACK (#15-#20)	1		
12	91406-729-000	CLIP, HEAD.....	1		
13	94050-06000	NUT, FLANGE, 6MM.....	4		
14	95701-06012-00	BOLT, FLANGE, 6X12.....	4		
15	95701-06028-00	BOLT, FLANGE, 6X28.....	4		
16	95701-08016-00	BOLT, FLANGE, 8X16.....	2		

1999.08.20 E

Frame

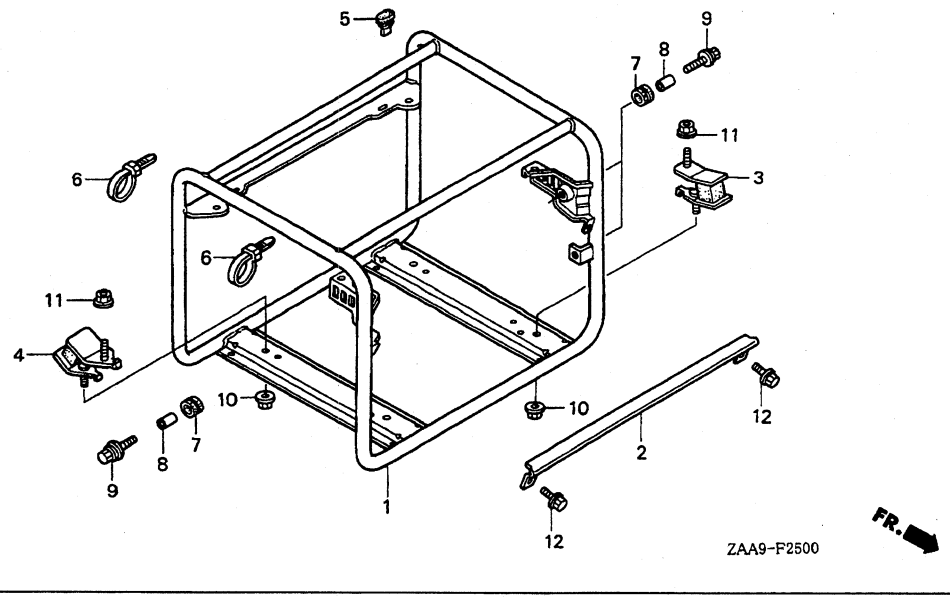

Service Item	F.R.T.
FRAME COMP.....	*1.0
CHANNEL, FR.....	0.1
RUBBER, BOTTOM.....	0.4
(ADD 0.1 FOR EACH.)	

Ref. No.	Part No.	Description	Reqd.QTY EM 6000 GN	Serial No.	Type
1	50310-ZP0-H61	FRAME COMP.....	1		
2	50315-ZC2-800ZA	CHANNEL, FR. *NH105*...MAT BLACK (#15-#20)	1		
3	68325-ZC2-000	RUBBER, BOTTOM.....	2		
4	68325-899-000	RUBBER, BOTTOM.....	2		
5	76122-952-000	STOPPER, DISCHARGE GUARD.....	2		
6	90679-SG9-E01	BAND, SUCTION HOSE.....	4		
7	90852-898-000	RUBBER, CONTROL BOX.....	3		
8	91552-898-000	COLLAR, CONTROL BOX.....	3		
9	93404-06020-00	BOLT-WASHER, 6X20.....	3		
10	94050-08000	NUT, FLANGE, 8MM.....	4		
11	94050-10000	NUT, FLANGE, 10MM.....	4		
12	95701-06012-00	BOLT, FLANGE, 6X12.....	2		

1999.08.20 E

Rear housing

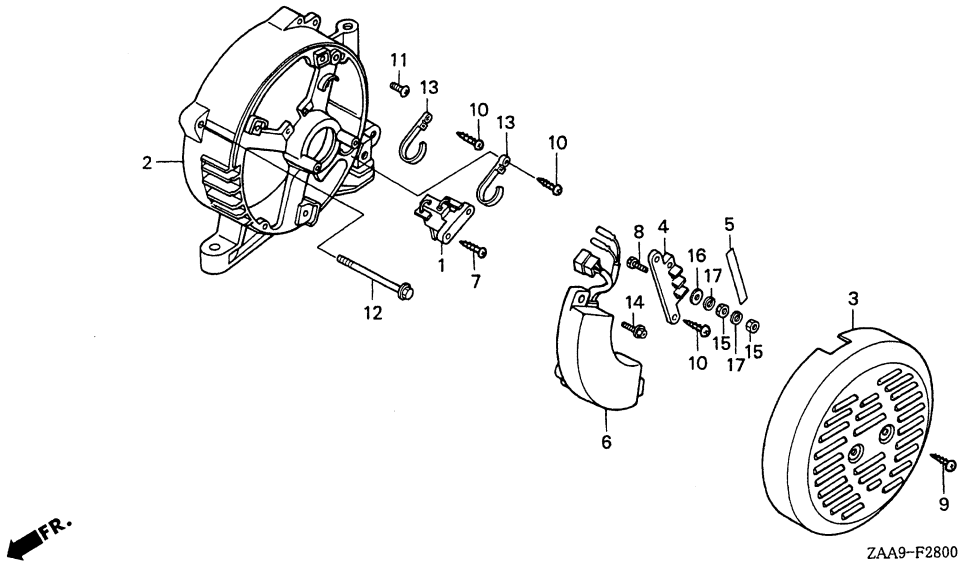

Service Item	F.R.T.
HOUSING, RR.....	0.8
BRUSH ASSY.....	0.2
.TERMINAL, VOLT CHANGE	
.REGULATOR ASSY., AUTOMATIC VOLTAGE	
COVER, GENERATOR END.....	0.1

Ref. No.	Part No.	Description	Reqd.QTY EM 6000 GN	Serial No.	Type
1	31106-ZB4-003	BRUSH ASSY.....	1		
2	31108-ZB4-631	HOUSING, RR. (311A0-ZB4-631)	1		
3	31113-ZB4-003ZD	COVER, GENERATOR END *NH105*...MAT BLACK (#15-#20)	1		
4	31118-898-691	TERMINAL, VOLT CHANGE.....	1		
5	31119-ZB4-651	MARK, VOLT.....	1		
6	31700-ZP0-H61	REGULATOR ASSY., AUTOMATIC VOLTAGE	1		
7	90031-ZC0-003	SCREW, TAPPING, 5X18.....	1		
8	90031-ZD1-E31	BOLT, HEX., 5X20.....	2		
9	90031-875-003	SCREW, TAPPING, 5X12.....	2		
10	90032-875-003	SCREW, TAPPING, 5X14.....	4		
11	90102-899-003	SCREW, PAN, 5X12.....	1		
12	90157-ZC2-003	BOLT, FLANGE, 6X160.....	4		
13	90673-ZB4-003	TIE, CABLE.....	2		
14	93904-25320	SCREW, TAPPING, 5X16.....	2		
15	94002-05390-0S	NUT, HEX., 5MM.....	4		
16	94101-05800	WASHER, PLAIN, 5MM.....	2		
17	94111-05800	WASHER, SPRING, 5MM.....	4		

Rotor/Stator

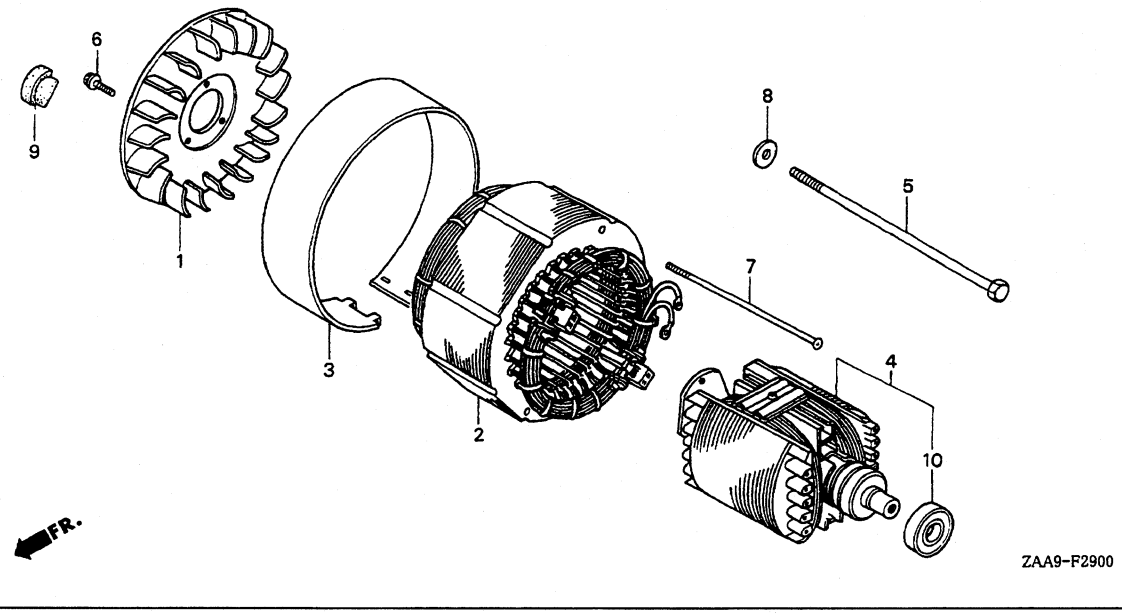

Service Item	F.R.T.
FAN, GENERATOR COOLING.....	1.0
.STATOR ASSY.	
COVER, STATOR.....	0.9
ROTOR COMP.....	1.1
BEARING ASSY., 6204.....	1.2

Ref. No.	Part No.	Description	Reqd.QTY EM 6000 GN	Serial No.	Type
1	31112-ZB4-003	FAN, GENERATOR COOLING.....	1		
2	31120-ZC2-651	STATOR ASSY.....	1		
3	31127-ZC2-631	COVER, STATOR.....	1		
4	31130-ZP0-H61	ROTOR COMP.....	1		
5	90021-ZC2-000	BOLT, HEX., 10X250.....	1		
6	90032-875-003	SCREW, TAPPING, 5X14.....	3		
7	90091-ZC2-003	BOLT-WASHER, 5X195.....	2		
8	90504-ZA0-000	WASHER, 10.5MM.....	1		
9	90855-ZB4-000	GROMMET, CRANKCASE.....	1		
10	91051-ZB4-003	BEARING ASSY., 6204.....	1		

1999.08.20 E

Labels

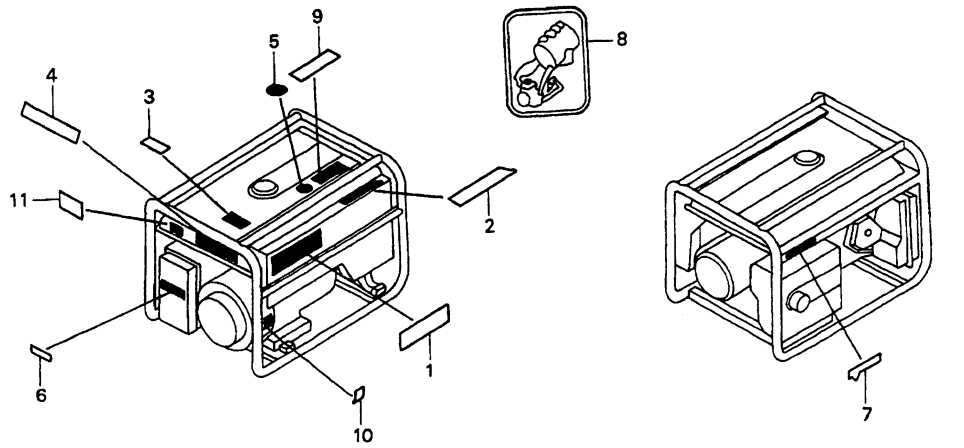

Service Item	F.R.T.

Ref. No.	Part No.	Description	Reqd.QTY EM 6000 GN	Serial No.	Type
1	87101-ZAA-K60	MARK, EMBLEM (EM6000GN).....	1		
2	87103-747-000	MARK, HONDA.....	1		
3	87106-ZAA-K60	LABEL, FUEL CAUTION.....	1		
4	87150-ZAA-K60	PLATE, CAUTION.....	1		
5	87522-ZE1-810	MARK, CAUTION.....	1		
6	87533-ZC0-630	MARK, AIR CLEANER.....	1		
7	87539-898-620	MARK, EX. CAUTION (ENGLISH/FRENCH)	1		
8	87541-ZB4-000	MARK, OIL CHECK.....	1		
9	87562-ZAA-K60	MARK, CO CAUTION.....	1		
10	87594-ZB4-A00	MARK, OIL CAUTION.....	1		
11	87648-ZAA-K60	LABEL, PRESSURE CAUTION.....	1		

Service Item	F.R.T.

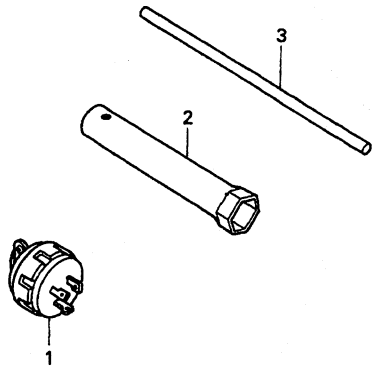

ZAA9-F3200

ZAA9F3200

Ref. No.	Part No.	Description	Reqd.QTY EM 6000 GN	Serial No.	Type
1	32310-ZD8-F61	PLUG ASSY. (20A-250V).....	2		
2	89216-ZB4-000	WRENCH, PLUG.....	1		
3	99005-01000	BAR A, HANDLE.....	1		

1999.08.20 E

Wheel

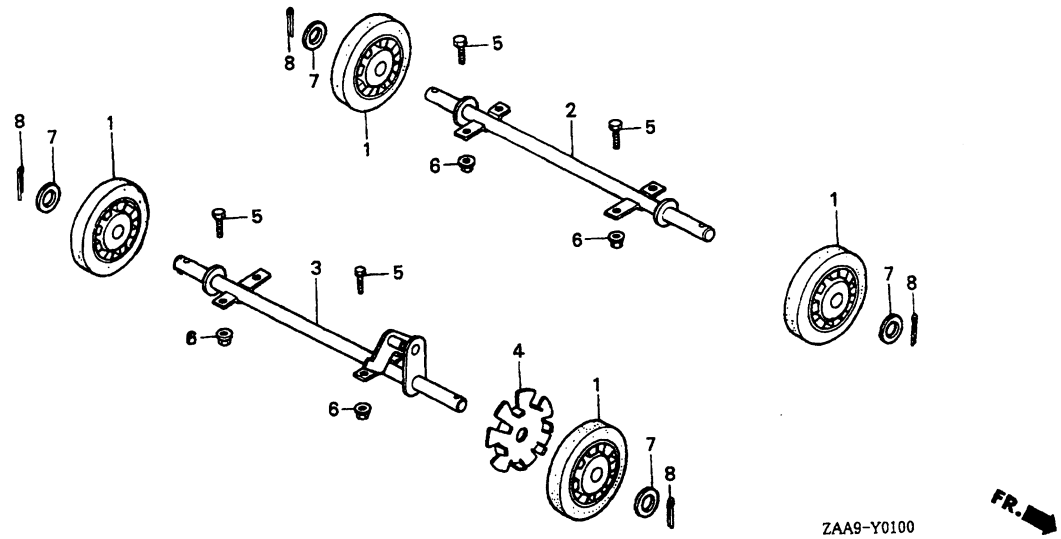

Service Item	F.R.T.
WHEEL COMP.....	0.1
.PLATE, LOCK	
SHAFT COMP., R. WHEEL.....	0.2
(ADD 0.1 FOR EACH.)	
.SHAFT COMP., L. WHEEL	

Ref. No.	Part No.	Description	Reqd.QTY EM 6000 GN	Serial No.	Type
1	42710-ZB4-003	WHEEL COMP.....	(4)		
2	42730-ZB4-000	SHAFT COMP., R. WHEEL.....	(1)		
3	42740-ZB4-000	SHAFT COMP., L. WHEEL.....	(1)		
4	42753-880-810	PLATE, LOCK.....	(1)		
5	92101-08016-0A	BOLT, HEX., 8X16.....	(8)		
6	94050-08000	NUT, FLANGE, 8MM.....	(8)		
7	94102-20000	WASHER, PLAIN, 20MM.....	(4)		
8	94201-40280	PIN, SPLIT, 4.0X28.....	(4)		

Switch box

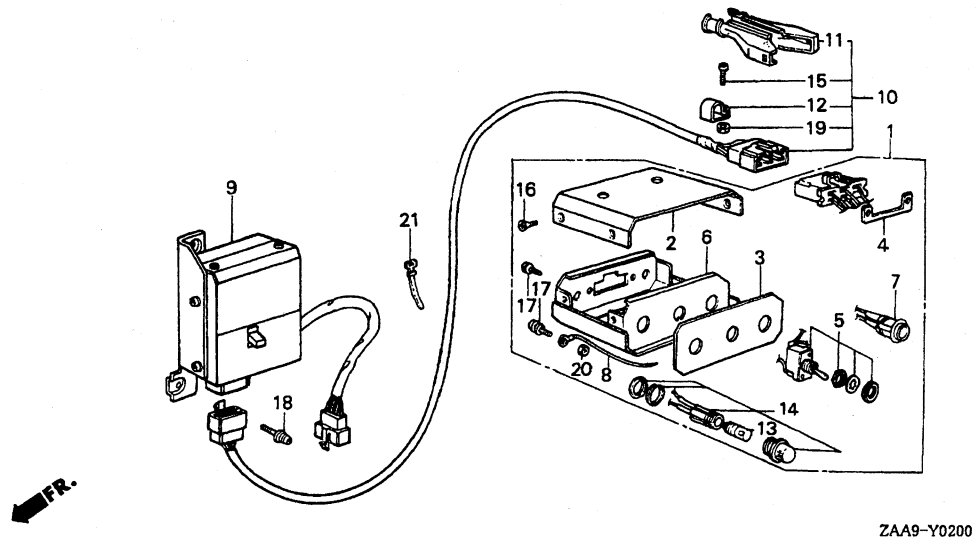

Service Item	F.R.T.
BOX ASSY., SWITCH.....	0.1
.BOX ASSY., RELAY	
.CABLE, REMOTE CONTROL	
.BULB, WEDGE BASE	
SWITCH, TOGGLE.....	0.2
.CASE COMP., SWITCH	
.SWITCH, PUSH	
.SOCKET ASSY., LAMP	

Ref. No.	Part No.	Description	Reqd.QTY EM 6000 GN	Serial No.	Type
1	31610-ZB4-000ZA	BOX ASSY., SWITCH			
		R8.....BRIGHT RED	(1)		
2	31611-880-810ZA	COVER, UPPER			
		R8.....BRIGHT RED	(1)		
3	31612-ZB4-000	PLATE, SWITCH & INDICATOR.....	(1)		
4	31613-880-810	PLATE, COUPLER SETTING.....	(1)		
5	31614-880-810	SWITCH, TOGGLE.....	(1)		
6	31615-ZB4-000ZA	CASE COMP., SWITCH			
		R8.....BRIGHT RED	(1)		
7	31619-880-810	SWITCH, PUSH.....	(1)		
8	31621-893-720	CORD, EARTH.....	(1)		
9	31650-ZAA-K60	BOX ASSY., RELAY.....	(1)		
10	31690-893-720	CABLE, REMOTE CONTROL (10M)...	(1)		
11	31691-893-720	COVER, COUPLER.....	(4)		
12	31692-893-720	BAND.....	(2)		
13	34908-GE0-701	BULB, WEDGE BASE (12V 2W).....	(1)		
14	37560-ZA0-801	SOCKET ASSY., LAMP (GREEN)....	(1)		
15	93500-03012-3C	SCREW, PAN, 3X12.....	(2)		
16	93600-04008-0H	SCREW, FLAT, 4X8.....	(4)		
17	93892-04012-08	SCREW-WASHER, 4X12.....	(3)		
18	93893-06025-10	SCREW-WASHER, 6X25.....	(2)		
19	94001-03330-0S	NUT, HEX., 3MM.....	(2)		
20	94001-04080-0S	NUT, HEX., 4MM.....	(1)		
21	95014-62100	BAND B1, WIRE.....	(2)		

1999.08.20 E

PART NO. INDEX

Part No.	Address No.	Page No.
11000		
11300-ZF6-F00	C3	15
11315-ZE3-700	C3	15
11381-ZE3-800	C3	15
12000		
12000-ZF6-L04	C2	14
12200-ZF6-F00	C1	13
12204-ZE2-306	C1	13
12205-ZE2-305	C1	13
12216-ZE2-300	C1	13
12251-ZF6-W00	C1	13
12310-ZE2-020	C1	13
12391-ZE2-020	C1	13
13000		
13010-ZF6-003	C5	17
13010-ZF6-005	C5	17
13011-ZF6-003	C5	17
13011-ZF6-005	C5	17
13012-ZF6-003	C5	17
13012-ZF6-005	C5	17
13013-ZF6-003	C5	17
13013-ZF6-005	C5	17
13101-ZF6-W00	C5	17
13102-ZF6-W00	C5	17
13103-ZF6-W00	C5	17
13104-ZF6-W00	C5	17
13111-ZF6-W00	C5	17
13200-ZE3-010	C5	17
13200-ZE3-315	C5	17
13310-ZF6-D40	C4	16
13351-ZE3-010	C4	16
14000		
14100-ZF6-W01	C6	18
14410-ZE3-013	C6	18
14431-ZE2-010	C6	18
14441-ZE2-000	C6	18
14451-ZE1-013	C6	18
14568-ZE1-000	C6	18
14711-ZF6-F00	C6	18
14721-ZF6-F00	C6	18
14751-ZE2-003	C6	18
14771-ZE2-000	C6	18
14775-ZE2-010	C6	18
14791-ZE2-010	C6	18
15000		
15510-ZE2-043	C2	14
15620-ZE2-700	C3	15
15721-ZB4-000	D3	27
16000		
16100-ZF6-F01	C8	20
16200-ZF6-F01	D6	30
16201-ZF6-F01	D6	30
16211-ZF6-000	C8	20
16220-ZA0-702	D3	27
16221-ZF6-800	C8	20
16223-ZE3-W00	C8	20
16234-ZF6-F00	D6	30
16236-ZF6-F00	D6	30
16238-ZF6-F00	D6	30
16239-ZF6-F00	D6	30
16347-ZF6-F00	C8	20
16348-ZAA-K60	D6	30
16380-ZF6-F01	D6	30
16382-ZF6-F00	D6	30
16387-ZAA-K60	D6	30
16500-ZF6-F00	C12	24
16510-ZE3-000	C3	15
16511-ZE8-000	C3	15
16512-ZE3-000	C3	15
16513-ZE2-000	C3	15
16531-ZE2-000	C3	15
16541-ZE3-010	C2	14
16551-ZE3-000	C12	24
16555-ZE3-000	C12	24
16561-ZE3-000	C12	24
16562-ZE3-000	C12	24
16584-883-300	C12	24
17000		
17110-ZF6-F00	D6	30
17211-899-000	D3	27
17212-ZB4-003	D3	27
17220-ZAA-K61	D3	27
17222-ZC2-000	D3	27
17231-899-000	D3	27
17235-899-000	D3	27
17236-899-000	D3	27
17252-899-000	D3	27
17367-413-690	D3	27
18000		
18310-ZD1-E31	D4	28
18320-ZC2-000	D4	28
18325-ZB4-000	D4	28
18329-ZB4-000	D4	28
18330-ZE3-700	C1	13
18333-ZB4-800	D4	28
18333-ZE3-800	C1	13
19000		
19511-ZE3-000	C9	21
19512-ZE2-000	C9	21
19513-PE0-003	D6	30
19610-ZF6-F00ZA	C7	19
19620-ZE3-L60ZA	C7	19
19631-ZE3-W00	C7	19
30000		
30500-ZE2-023	C10	22
30700-ZE1-013	C10	22
31000		
31100-ZF6-F00	C9	21
31106-ZB4-003	D9	33
31108-ZB4-631	D9	33
31112-ZB4-003	D10	34
31113-ZB4-003ZD	D9	33
31118-898-691	D9	33
31119-ZB4-651	D9	33
31120-ZC2-651	D10	34
31127-ZC2-631	D10	34
31130-ZP0-H61	D10	34
31204-ZA0-003	C11	23
31206-ZE3-003	C11	23
31207-ZE3-003	C11	23
31210-ZE3-013	C11	23
31211-ZE2-003	C11	23
31212-ZE3-003	C11	23
31213-ZE2-003	C11	23
31215-ZE2-003	C11	23
31218-ZE3-003	C11	23
31219-ZE2-003	C11	23
31222-ZE3-791	C11	23
31231-ZE2-003	C11	23
31232-ZE3-003	C11	23
31233-ZE2-003	C11	23
31408-ZP0-H61	D1	25
31420-ZAA-K61ZA	D1	25
31425-ZP0-H61	D1	25
31428-ZB4-013	D1	25
31462-ZB4-000	D1	25
31511-ZB4-000	D7	31
31511-ZE3-000	C10	22
31512-ZE2-000	C10	22
31512-880-810	D7	31
31513-634-000	D7	31
31521-880-000	D7	31
31550-899-000	D7	31
31610-ZB4-000ZA	D14	38
31611-880-810ZA	D14	38
31612-ZB4-000	D14	38
31613-880-810	D14	38
31614-880-810	D14	38
31615-ZB4-000ZA	D14	38
31619-880-810	D14	38
31620-881-A02	D1	25
31621-893-720	D14	38
31630-ZF5-003	C10	22
31650-ZAA-K60	D14	38
31690-893-720	D14	38
31691-893-720	D14	38
31692-893-720	D14	38
31700-ZP0-H61	D9	33
31700-166-008	D1	25
32000		
32114-230-003	D1	25
32150-ZAA-K61	D1	25
32173-ZAA-K60	D6	30
32310-ZD8-F61	D12	36
32331-880-680	D1	25
32340-ZAA-K61ZA	D1	25
32366-ZAA-K60	D1	25
32410-ZB4-620	D7	31
32430-ZB4-620	D7	31
32601-SK7-900	D7	31
32602-SK7-900	D7	31
34000		
34150-ZH7-003	C2	14
34341-ZAA-K61	D1	25
34343-ZAA-K61	D1	25
34908-GE0-701	D14	38
35000		
35100-ZA0-013	D1	25
35111-880-003	D1	25
36000		
36101-ZE3-800	C10	22
37000		
37450-ZD8-F61	D1	25
37560-ZA0-801	D14	38
38000		
38220-ZAA-K61	D1	25
39000		
39700-ZC6-003	D1	25
42000		
42710-ZB4-003	D13	37
42730-ZB4-000	D13	37
42740-ZB4-000	D13	37
42753-880-810	D13	37
50000		
50310-ZP0-H61	D8	32
50315-ZC2-800ZA	D8	32
50365-ZD1-E30ZA	D7	31
50375-ZD1-E30ZA	D7	31
63000		
63110-ZAA-K61	D5	29
63113-ZAA-K60	D5	29
68000		
68325-ZC2-000	D8	32
68325-899-000	D8	32
76000		
76122-952-000	D8	32
81000		
81329-567-020	C7	19
87000		
87101-ZAA-K60	D11	35
87103-747-000	D11	35
87106-ZAA-K60	D11	35
87150-ZAA-K60	D11	35
87501-ZP0-F21	D1	25
87522-ZE1-810	D11	35
87533-ZC0-630	D11	35
87534-892-640	D1	25
87539-898-620	D11	35
87541-ZB4-000	D11	35
87562-ZAA-K60	D11	35
87594-ZB4-A00	D11	35
87648-ZAA-K60	D11	35
89000		
89216-ZB4-000	D12	36
90000		
90001-ZE8-000	C5	17
90007-ZE2-003	C11	23
90011-899-840	D1	25
90012-ZE0-010	C6	18
90013-883-000	C2	14
	C7	19
	C10	22
	C12	24
	D2	26
90014-ZE2-000	C1	13
90014-ZE6-000	C10	22
90015-ZE5-010	C12	24
90015-883-000	C10	22
90019-883-000	C3	15
90021-ZC2-000	D10	34
90031-ZC0-003	D9	33
90031-ZD1-E31	D9	33
90031-875-003	D9	33
90032-875-003	D9	33
	D10	34
90042-ZE3-700	C1	13
90091-ZC2-003	D10	34
90101-692-000	D2	26
90102-899-003	D9	33
90110-ZE2-003	C11	23
90131-883-000	C2	14
90132-SP0-000	D6	30
90157-ZC2-003	D9	33
90201-ZB4-003	D2	26
90201-ZE3-V00	C9	21
90206-ZE1-000	C6	18
90441-ZE2-010	C1	13
90446-KE1-000	C2	14
90473-147-000	C3	15
90503-898-000	D5	29
90504-ZA0-000	D10	34
90601-ZE3-000	C5	17
90602-ZE1-000	C3	15
90650-ZB4-621	D2	26
90672-ZB4-003	D2	26
90673-ZB4-003	D9	33
90678-MN5-000	C8	20
	D6	30
90678-ZA0-601	D6	30
90679-SG9-E01	D8	32
90684-ZA0-601	D6	30
90701-HC4-000	C3	15
90741-ZE2-000	C9	21
90851-SA6-000	C7	19
90851-898-000	D5	29
90852-898-000	D8	32
90855-ZB4-000	D10	34
91000		
91001-ZF6-003	C4	16
91051-ZB4-003	D10	34
91201-ZE3-004	C2	14
	C3	15
91203-952-771	C2	14
91301-805-000	C3	15
91353-671-004	C2	14
91406-ZAA-K60	D2	26
91406-671-000	D2	26
91406-729-000	D7	31

PART NO. INDEX

Part No.	Address No.	Page No.
91551-898-000	D5	29
91552-898-000	D8	32
91601-ZB4-003	D2	26
91601-ZE2-003	C11	23
92000		
92101-08016-0A	D13	37
92900-08032-0E	C1	13
93000		
93401-06025-00	D6	30
93404-06020-00	D8	32
93500-03006-1G	D2	26
93500-03012-3C	D14	38
93500-05035-0A	C12	24
93500-06020-1G	D2	26
93600-04008-0H	D14	38
93892-04012-08	D14	38
93892-05032-18	C11	23
93893-05016-18	D2	26
93893-06025-10	D14	38
93904-25320	D9	33
94000		
94001-03330-0S	D14	38
94001-04080-0S	D14	38
94001-06390-0S	D2	26
94002-05390-0S	D9	33
94050-04000	D2	26
94050-05000	D3	27
94050-06000	C12	24
	D3	27
	D7	31
94050-08000	C1	13
	D8	32
	D13	37
94050-10000	C2	14
	D8	32
94070-06080	C11	23
94101-05800	D9	33
94101-06800	C3	15
	D2	26
94102-20000	D13	37
94103-08000	D4	28
94109-12000	C2	14
94111-05800	D9	33
94111-06800	D2	26
94201-40280	D13	37
94251-10000	C2	14
94301-12200	C1	13
95000		
95014-62100	D14	38
95701-06008-00	C7	19
95701-06010-00	D4	28
	D6	30
95701-06012-00	C2	14
	D7	31
	D8	32
95701-06022-00	D5	29
95701-06028-00	D7	31
95701-06040-18	D2	26
95701-08016-00	D7	31
95701-08016-08	D4	28
95701-08020-00	D4	28
95701-08035-08	C11	23
95701-08040-00	C3	15
95725-10080-00	C1	13
96000		
96100-62020-00	C2	14
	C3	15
96100-62070-00	C3	15
98000		
98079-56846	C1	13
98200-21000	D2	26
99000		
99005-01000	D12	36

PART NAME INDEX

Part name	Address No.	Page No.	Ref. No.
[A]			
ALERT UNIT, OIL	C2	14	4
ARM, GOVERNOR	C12	24	2
ARM, VALVE ROCKER	C6	18	3
ARMATURE COMP.	C11	23	2
[B]			
BAND	D14	38	12
BAND B1, WIRE	D14	38	21
BAND, SUCTION HOSE	D8	32	6
BAR A, HANDLE	D12	36	3
BARREL ASSY., CYLINDER	C2	14	1
BASE, BATTERY TRAY	D7	31	5
BEARING ASSY., 6204	D10	34	10
BEARING, RADIAL BALL, 6202	C2	14	15
	C3	15	18
BEARING, RADIAL BALL, 6207	C3	15	19
BEARING, RADIAL BALL, 6207S	C4	16	3
BOLT-WASHER, 5X14	C11	23	15
BOLT-WASHER, 5X195	D10	34	7
BOLT-WASHER, 6X16	D6	30	14
BOLT-WASHER, 6X20	D8	32	9
BOLT-WASHER, 6X25	D6	30	18
BOLT, BATTERY SETTING, 220MM	D7	31	3
BOLT, BATTERY TERMINAL	D7	31	8
BOLT, CONNECTING ROD	C5	17	5
BOLT, DRAIN PLUG	C2	14	6
BOLT, FLANGE, 10X80	C1	13	16
BOLT, FLANGE, 5X10	C3	15	10
BOLT, FLANGE, 6X10	D4	28	7
	D6	30	19
BOLT, FLANGE, 6X12	C2	14	5
			14
	C7	19	5
	C10	22	7
	C12	24	7
	D2	26	23
	D7	31	14
	D8	32	12
BOLT, FLANGE, 6X160	D9	33	12
BOLT, FLANGE, 6X22	D5	29	6
BOLT, FLANGE, 6X28	C10	22	9
	D7	31	15
BOLT, FLANGE, 6X35	C10	22	8
BOLT, FLANGE, 6X40	D2	26	38
BOLT, FLANGE, 6X8	C7	19	7
BOLT, FLANGE, 8X16	D4	28	8
	D7	31	16
BOLT, FLANGE, 8X20	D4	28	9
BOLT, FLANGE, 8X35	C11	23	20
BOLT, FLANGE, 8X40	C3	15	17
BOLT, GOVERNOR ARM	C12	24	8
BOLT, HEAD COVER	C1	13	10
BOLT, HEX., 10X250	D10	34	5
BOLT, HEX., 5X20	D9	33	8
BOLT, HEX., 6X28	D1	25	22
BOLT, HEX., 8X16	D13	37	5
BOLT, PIVOT	C6	18	13
BOLT, STUD, 8X106	C1	13	11
BOLT, STUD, 8X32	C1	13	13
BOX ASSY., CONTROL	D1	25	11
BOX ASSY., RELAY	D14	38	9
BOX ASSY., SWITCH	D14	38	1
BRACKET, CENTER	C11	23	5
BRACKET, FR.	C11	23	6
BREAKER, CIRCUIT	D1	25	18
BRUSH	C11	23	8
BRUSH ASSY.	D9	33	1
BULB, WEDGE BASE	D14	38	13
BUSHING	D6	30	3
[C]			
CABLE ASSY., EARTH	D7	31	7
CABLE ASSY., STARTING	D7	31	6
CABLE, REMOTE CONTROL	D14	38	10
CAMSHAFT ASSY.	C6	18	1
CAP ASSY., NOISE SUPPRESSOR	C10	22	2
CAP, GENERATOR TOP COVER	D5	29	2
CAP, OIL FILLER	C3	15	4
CARBURETOR ASSY.	C8	20	1
CASE COMP., AIR CLEANER	D3	27	5
CASE COMP., SWITCH	D14	38	6
CASE, CONTROL	D1	25	3
CASE, FUSE CONNECTOR	D1	25	8
CHANNEL, FR.	D8	32	2
CLAMP, WATER HOSE	D6	30	12
CLAMPER, CORD	C10	22	3
CLIP A, AIR CLEANER WIRE	D3	27	8
CLIP B, AIR CLEANER WIRE	D3	27	9
CLIP, FUEL HOSE	C8	20	6
	D6	30	15
CLIP, GOVERNOR HOLDER	C3	15	12
CLIP, HARNESS	D6	30	16
			17
CLIP, HEAD	D7	31	12
CLIP, PISTON PIN, 20MM	C5	17	6
CLIP, TUBE	D2	26	26
CLIP, VALVE GUIDE	C1	13	4
CLIP, WIRE HARNESS	D2	26	29
CLUTCH COMP., OVERRUNNING	C11	23	3
COIL ASSY., CHARGE	C10	22	5
COIL ASSY., IGNITION	C10	22	1
COLLAR, CONTROL BOX	D8	32	8
COLLAR, TANK CUSHION	D5	29	5
CONSENT	D1	25	10
CONTACTOR ASSY.	C11	23	1
CONTROL ASSY.	C12	24	1
CORD, EARTH	D14	38	8
CORD, STOP SWITCH	C10	22	6
COVER ASSY., CRANKCASE	C3	15	1
COVER COMP., AIR CLEANER	D3	27	7
COVER COMP., FAN	C7	19	1
COVER COMP., HEAD	C1	13	6
COVER COMP., TOP	D5	29	1
COVER, COUPLER	D14	38	11
COVER, DUCT	C3	15	2
COVER, GENERATOR END	D9	33	3
COVER, STATOR	D10	34	3
COVER, UPPER	D14	38	2
CRANKSHAFT COMP.	C4	16	1
CUSHION, VALVE CONTROL UNIT	D1	25	14
[E]			
ELEMENT, AIR CLEANER	D3	27	3
[F]			
FAN, COOLING	C9	21	1
FAN, GENERATOR COOLING	D10	34	1
FILTER, DRAIN TUBE	D3	27	11
FLYWHEEL COMP.	C9	21	3
FRAME COMP.	D8	32	1
FUSE B	D2	26	39
[G]			
GASKET, CYLINDER HEAD	C1	13	5
GASKET, EX. PIPE	C1	13	9
	D4	28	5
GEAR, DRIVE PINION	C11	23	7
GEAR, REDUCTION	C11	23	11
GOVERNOR ASSY.	C3	15	5
GROMMET, CORD	C10	22	4
GROMMET, CRANKCASE	D10	34	9
GROMMET, DRAIN HOLE	C7	19	4
GROMMET, TUBE	D2	26	30
GUARD, FR. BATTERY	D7	31	10
GUARD, RR. BATTERY	D7	31	11
GUIDE, EX. VALVE	C1	13	3
GUIDE, IN. VALVE	C1	13	2
[H]			
HARNESS ASSY., CONTROL WIRE	D1	25	9
HARNESS ASSY., SOLENOID VALVE	D6	30	13
HEAD COMP., CYLINDER	C1	13	1
HOLDER, BRUSH	C11	23	12
HOLDER, GOVERNOR WEIGHT	C3	15	7
HOSE, FUEL	C8	20	5
HOSE, FUEL EXTENSION	D6	30	7
HOUSING, RR.	D9	33	2

PART NAME INDEX

Part name	Address No.	Page No.	Ref. No.
[I]			
INSULATOR	C11	23	14
INSULATOR, CARBURETOR	C8	20	2
[J]			
JOINT, HOSE	D6	30	4
JOINT, IN. PIPE	D6	30	6
[K]			
KEY COMP.	D1	25	16
KEY, SPECIAL WOODRUFF, 25X18	C9	21	5
[L]			
LABEL, FUEL CAUTION	D11	35	3
LABEL, PRESSURE CAUTION	D11	35	11
LIFTER, VALVE	C6	18	4
[M]			
MARK, A.C. OUTPUT	D1	25	1
MARK, AIR CLEANER	D11	35	6
MARK, CAUTION	D11	35	5
MARK, CO CAUTION	D11	35	9
MARK, EARTH	D1	25	21
MARK, EMBLEM	D11	35	1
MARK, ENGINE SWITCH	D1	25	20
MARK, EX. CAUTION	D11	35	7
MARK, HONDA	D11	35	2
MARK, OIL CAUTION	D11	35	10
MARK, OIL CHECK	D11	35	8
MARK, PANEL SWITCH	D1	25	12
MARK, VOLT	D9	33	5
METER ASSY., HOUR	D1	25	19
MOTOR UNIT, STARTER	C11	23	4
MUFFLER COMP.	D4	28	1
[N]			
NIPPLE	D6	30	5
NUT-WASHER, 6MM	C11	23	19
NUT, BATTERY TERMINAL	D7	31	9
NUT, FLANGE, 10MM	C2	14	11
	D8	32	11
NUT, FLANGE, 3MM	D2	26	25
NUT, FLANGE, 4MM	D2	26	35
NUT, FLANGE, 5MM	D3	27	12
NUT, FLANGE, 6MM	C12	24	10
	D3	27	13
NUT, FLANGE, 6MM	D7	31	13
NUT, FLANGE, 8MM	C1	13	14
	D8	32	10
	D13	37	6
NUT, HEX., 3MM	D14	38	19
NUT, HEX., 4MM	D14	38	20
NUT, HEX., 5MM	D9	33	15
NUT, HEX., 6MM	D2	26	34
NUT, PIVOT ADJUSTING	C6	18	14
NUT, SPECIAL, 16MM	C9	21	4
[O]			
O-RING, 14MM	C2	14	10
O-RING, 26X2.7	C3	15	15
OIL SEAL, 35X52X8	C2	14	8
	C3	15	14
OIL SEAL, 8X14X5	C2	14	9
[P]			
PACKING	C11	23	17
PACKING, CARBURETOR	C8	20	3
PACKING, CASE COVER	C3	15	3
PACKING, HEAD COVER	C1	13	7
PACKING, INSULATOR	C8	20	4
PACKING, ZERO GOVERNOR	D6	30	9
PANEL, CONTROL	D1	25	2
PIN, DOWEL, 12X20	C1	13	15
PIN, DOWEL, 8X12	C3	15	13
PIN, GOVERNOR WEIGHT	C3	15	8
PIN, LOCK, 10MM	C2	14	13
PIN, PISTON	C5	17	3
PIN, SPLIT, 4.0X28	D13	37	8
PIPE COMP., IN.	D6	30	11
PIPE, EX.	C1	13	8
PISTON	C5	17	2
PIVOT, ROCKER ARM	C6	18	5
PLATE, BATTERY	D7	31	4
PLATE, BATTERY GUARD	D7	31	1
PLATE, BATTERY SETTING	D7	31	2
PLATE, CAUTION	D11	35	4
PLATE, COOLING FAN SETTING	C9	21	2
PLATE, COUPLER SETTING	D14	38	4
PLATE, LOCK	D13	37	4
PLATE, PUSH ROD GUIDE	C6	18	12
PLATE, SWITCH & INDICATOR	D14	38	3
PLUG ASSY.	D12	36	1
PLUG, HOLE	C7	19	6
PLUG, SPARK	C1	13	17
PROTECTOR COMP., FAN COVER	C7	19	2
PROTECTOR, MUFFLER INNER	D4	28	3
PROTECTOR, MUFFLER OUTER	D4	28	2
[R]			
RECTIFIER ASSY., REGULATOR	D1	25	6
RECTIFIER COMP., SILICON	D1	25	7
REGULATOR ASSY., AUTOMATIC VOLTAGE	D9	33	6
RETAINER, IN. VALVE SPRING	C6	18	10
RING SET, PISTON	C5	17	1
ROD ASSY., CONNECTING	C5	17	4
ROD, GOVERNOR	C12	24	3
ROD, PUSH	C6	18	2
ROTOR COMP.	D10	34	4
RUBBER, BOTTOM	D8	32	3
			4
RUBBER, CONTROL	D1	25	5
RUBBER, CONTROL BOX	D8	32	7
RUBBER, TANK CUSHION	D5	29	4
[S]			
SCREW-WASHER, 4X12	D14	38	17
SCREW-WASHER, 4X6	C11	23	16
SCREW-WASHER, 5X16	D2	26	33
SCREW-WASHER, 5X32	C11	23	18
SCREW-WASHER, 6X25	D14	38	18
SCREW, FLAT, 4X8	D14	38	16
SCREW, GLOVE BOX	D2	26	24
SCREW, PAN, 3X12	D14	38	15
SCREW, PAN, 3X6	D2	26	31
SCREW, PAN, 5X12	D9	33	11
SCREW, PAN, 5X35	C12	24	9
SCREW, PAN, 6X20	D2	26	32
SCREW, TAPPING, 5X12	D9	33	9
SCREW, TAPPING, 5X14	D9	33	10
	D10	34	6
SCREW, TAPPING, 5X16	D9	33	14
SCREW, TAPPING, 5X18	D9	33	7
SEAL, AIR CLEANER	D3	27	10
SEAL, MUFFLER PROTECTOR	D4	28	4
SEAT, VALVE SPRING	C6	18	11
SEPARATOR, AIR CLEANER	D3	27	4
SHAFT COMP., L. WHEEL	D13	37	3
SHAFT COMP., R. WHEEL	D13	37	2
SHAFT, GOVERNOR ARM	C2	14	3
SHROUD	C7	19	3
SLIDER, GOVERNOR	C3	15	9
SOCKET ASSY., LAMP	D14	38	14
SPACER COMP., CARBURETOR	D3	27	2
SPRING, BRUSH RETURN	C11	23	10
SPRING, CONTROL ADJUSTING	C12	24	6
SPRING, GOVERNOR	C12	24	4
SPRING, THROTTLE RETURN	C12	24	5
SPRING, VALVE	C6	18	9
SPRING, WEIGHT RETURN	C6	18	6
STATOR ASSY.	D10	34	2
STAY COMP., ZERO GOVERNOR	D6	30	10

PART NAME INDEX

Part name	Address No.	Page No.	Ref. No.
STAY, AIR CLEANER	D3	27	6
STOPPER, DISCHARGE GUARD	D8	32	5
SWITCH ASSY., COMBINATION	D1	25	15
SWITCH ASSY., OIL LEVEL	C2	14	2
SWITCH, PUSH	D14	38	7
SWITCH, TOGGLE	D14	38	5
[T]			
TERMINAL SET, EARTH	D1	25	4
TERMINAL, VOLT CHANGE	D9	33	4
TIE, CABLE	D2	26	27
	D9	33	13
TUBE, BREATHER	D3	27	1
TUBE, CORD	D2	26	28
[U]			
UNIT COMP., VALVE CONTROL	D1	25	13
[V]			
VALVE ASSY., SOLENOID	D6	30	1
			2
VALVE, EX.	C6	18	8
VALVE, IN.	C6	18	7
VOLTMETER ASSY.	D1	25	17
[W]			
WASHER COMP., HEAD COVER	C1	13	12
WASHER, DRAIN PLUG, 12MM	C2	14	12
WASHER, PLAIN, 20MM	D13	37	7
WASHER, PLAIN, 5MM	D9	33	16
WASHER, PLAIN, 6MM	C3	15	16
	D2	26	36
WASHER, PLAIN, 8MM	D4	28	6
WASHER, SPRING, 5MM	D9	33	17
WASHER, SPRING, 6MM	D2	26	37
WASHER, TANK CUSHION	D5	29	3
WASHER, 10.5MM	D10	34	8
WASHER, 6X16	C3	15	11
WASHER, 8.2X17X0.8	C2	14	7
WEIGHT, BALANCER	C4	16	2
WEIGHT, GOVERNOR	C3	15	6
WHEEL COMP.	D13	37	1
WIRE, WATER COVER	C11	23	13
WRENCH, PLUG	D12	36	2
[Y]			
YOKE COMP.	C11	23	9
[Z]			
ZERO GOVERNOR ASSY.	D6	30	8

INDEX

1 FOREWORD INDEX

2 ENGINE GROUP

3 FRAME GROUP

4 PART NUMBER INDEX

5 PART NAME INDEX

HONDA

HONDA MOTOR CO., LTD. TOKYO, JAPAN

© A0309908

PRINTED IN JAPAN